rexroth
A Bosch Company

Chain conveyor system VarioFlow *plus*

modules

Valid for the following types:

3 842 998 291 + ...742	3 842 547 712 + ...713
3 842 998 776	3 842 549 023 – ...026
3 842 546 120 – ...125	3 842 552 940 – ...942
3 842 547 380 + ...381	3 842 552 984 + ...985
3 842 547 516 – ...531	3 842 553 914 + ...915

Assembly instructions
3 842 562 412/2019-06

Replaces: –
ENGLISH

ENGLISH

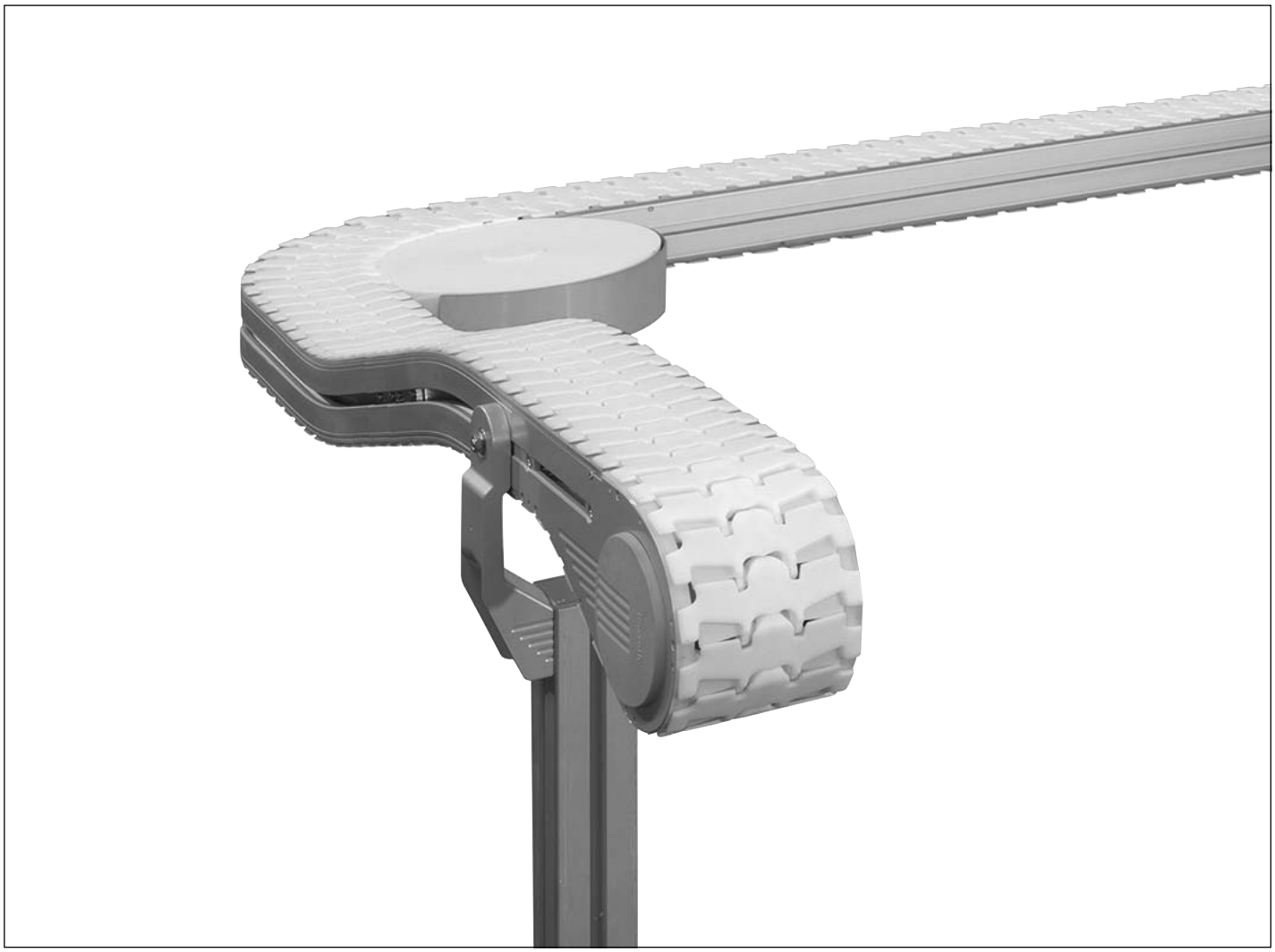

The information in this manual is for product description purposes only. Any statements in this manual on how to use the product only constitute examples and recommendations. Catalog information is not binding. The information given does not release the user from the obligation of own judgment and verification. Our products are subject to natural wear and aging.

© All rights reserved by Bosch Rexroth AG, also for the registration of industrial property rights. This document may not be reproduced or distributed to third parties without our consent.

The cover depicts a sample configuration. The actual product may vary.

The original assembly instructions are in German.

DE Die vorliegende Montageanleitung ist in den hier angebenen Sprachen verfügbar. Weitere Sprachen auf Anfrage.
Als gedruckte Version oder als PDF-Datei zum Download aus dem Medienverzeichnis:
www.boschrexroth.com/medienverzeichnis
Geben Sie in die Suchmaske (oben rechts, unter „**Suche**“) **3 842 562 411** ein, dann klicken Sie auf „▶**Suche**“.

EN These assembly instructions are available in the languages indicated here. Other languages on request.
They come in a hard copy or a PDF file that can be downloaded from the media directory:
www.boschrexroth.com/mediadirectory
In the search mask (at the top right under “**Search**”) enter **3 842 562 412**, then click on “▶**Search**”.

FR Les présentes instructions de montage sont disponibles dans les langues suivantes. Autres langues sur demande.
Disponible au téléchargement en version imprimée ou en fichier PDF à partir du répertoire médias :
www.boschrexroth.com/mediadirectory
Saisissez 3 842 562 411 dans le champ de recherche (en haut à droite, sous « **Search** ») **3 842 562 413** puis cliquez sur « ▶**Search** ».

IT Le presenti istruzioni di montaggio sono disponibili nelle lingue indicate qui. Altre lingue su richiesta.
Possono essere scaricate come versione stampata o file PDF dalla Media Directory:
Inserire **www.boschrexroth.com/mediadirectory**
nella maschera di ricerca (in alto a destra, sotto “**Search**”) **3 842 562 414** e poi fare clic su “▶**Search**”.

ES Las presentes instrucciones de montaje están disponibles en los idiomas indicados. Otros idiomas a petición.
Las instrucciones están disponibles como versión impresa o como archivo PDF para descargar del archivo de medios:
www.boschrexroth.com/mediadirectory
En el buscador (en la parte superior derecha, en “**Search**”) introduzca **3 842 562 415**, a continuación haga clic en “▶**Search**”.

PT O presente manual de montagem está disponível nos idiomas aqui indicados. Demais idiomas, sob consulta.
Como versão impressa ou o arquivo PDF para download no diretório de mídias:
www.boschrexroth.com/mediadirectory
Insira a máscara de pesquisa (parte superior direita, em “**Search**”) **3 842 562 416**, e clique em “▶**Search**”.

ZH 本安装说明书有这里给出的语言版本。还可按照需求提供其他语言版本。
有印刷版本或电子版本 PDF 文件供使用，电子版文件可在下列的公司网站媒体网页上下载：
www.boschrexroth.com/mediadirectory
在搜索窗口（右上角，“**Search**”之下）中输入 **3 842 562 417**，然后点击“▶**Search**”。

CS Tento montážní návod je k dispozici v uvedených jazycích. Další jazykové verze na vyžádání.
Jako tištěná verze nebo jako soubor ve formátu PDF ke stažení z adresáře médií:
www.boschrexroth.com/mediadirectory
Zadejte do vyhledávacího políčka (vpravo nahoře, pod „**Search**“) **MTCS 562 411**, poté klikněte na „▶**Search**“.

PL Niniejsza instrukcja montażu dostępna jest w podanych tutaj wersjach językowych. Inne wersje językowe na zapytanie.
W wersji drukowanej lub jako plik PDF do pobrania w wykazie mediów:
www.boschrexroth.com/mediadirectory
W polu wyszukiwania (na górze z prawej strony, w polu „**Search**”) **MTPL 562 411**, a następnie kliknąć „▶**Search**”.

HU A jelen szerelési utasítás az itt megadott nyelveken áll rendelkezésre. További nyelvek rendelésre.
Nyomtatott változatként vagy a médiakönyvtárból letölthető PDF-fájlként:
www.boschrexroth.com/mediadirectory
Írja be a keresőmezőbe (jobbra fent, a „**Search**” alatt): **MTHU 562 411**, majd kattintson a „▶**Search**” gombra.

RO Aceste instrucțiuni de montaj sunt disponibile în limbile enumerate aici. Alte limbi la cerere.
Sub formă de versiune tipărită sau ca fișier PDF pentru a fi descărcat din directorul de conținuturi (mediadirectory):
www.boschrexroth.com/mediadirectory
Introduceți în masca de căutare (sus, în partea dreaptă, la „**Search**“) **MTRO 562 411**, apoi faceți clic pe „▶**Search**“.

DE	**3 842 562 411**		Kettenfördersystem VarioFlow *plus* Baugruppen	Deutsch
EN	**3 842 562 412**		Chain conveyor system VarioFlow *plus* modules	English
FR	**3 842 562 413**		Système de transport à chaîne VarioFlow *plus* Modules	Français
IT	**3 842 562 414**		Sistema di trasferimento a catena VarioFlow *plus* moduli	Italiano
ES	**3 842 562 415**		Sistema de transporte por cadenas VarioFlow *plus* Módulos	Español
PT	**3 842 562 416**		Sistema transportador de correntes VarioFlow *plus* Módulos	Português
ZH	**3 842 562 417**		链式输送系统 VarioFlow *plus* 组件	中文
CS	**MTCS 562 411**	[1])	Řetězový dopravníkový systém VarioFlow *plus* moduly	Česky
PL	**MTPL 562 411**	[1])	Podzespoły systemu przenośników łańcuchowych VarioFlow *plus*	Polski
HU	**MTHU 562 411**	[1])	Láncvonóelemes szállítóberendezés VarioFlow *plus* Részegységek	Magyar
RO	**MTRO 562 411**	[1])	Sistem de transport cu lanț VarioFlow *plus* subansambluri	Română

[1]) Only as PDF / Not available in print.

Bosch Rexroth AG, MIT: VarioFlow, 3 842 562 412/2019-06

Contents

1	**About this documentation**	**7**
1.1	Validity of the documentation	7
1.2	Required and supplementary documentation	7
1.3	Presentation of information	7
1.3.1	Safety instructions	7
1.3.2	Symbols	8
2	**Safety instructions**	**9**
2.1	About this section	9
2.2	Intended use	9
2.3	Improper use	9
2.4	Personnel qualifications	10
2.5	General safety instructions	10
2.6	Product-specific safety instructions	10
2.7	Personal protective equipment	12
2.8	Operator responsibilities	12
3	**General notes on property and product damage**	**12**
4	**Scope of delivery**	**12**
4.1	Condition on delivery	12
5	**About this product**	**13**
5.1	Specifications	13
5.1.1	Use of VarioFlow ***plus*** modules	13
5.1.2	Design of VarioFlow ***plus*** modules	13
5.2	Product description	13
5.3	Identification of the product	14
6	**Transport and storage**	**14**
6.1	Transporting the product	14
6.2	Storing the product	14
7	**Assembly**	**15**
7.1	Unpacking	15
7.2	Installation requirements	15
7.2.1	Installation position	15
7.3	Required tools	15
7.4	Symbols used	16
7.5	Installing the product	17
7.5.1	AL system	18
	Leg sets	18
	Installing open-type section profiles	19
	Section on leg sets	20
	Straight section	21
	Curve wheel	22
	Installing the curve wheel drive	23
	Sliding curve horizontal	25
	Horizontal roller curve on a section	26
	Horizontal roller curve on a basic unit / return unit	27
	Profile connector adjustable 0-5°	28
	Vertical curve AL, VF 65 / VF 90 / VF 120	28
	Profile connector adjustable 0–5°	28
	Vertical curve AL, VF 160 / VF 240 / VF 320	29
	Vertical curve AL on a basic unit / return unit	32
	Assembly module	33
	Opening/closing the assembly module	34
	Return unit	35

ENGLISH

	Basic unit	36
	Connection drive	38
	Center drive	39
7.5.2	STS system	40
	Leg sets	40
	Pre-assembling section profiles	41
	Section on leg sets	42
	Straight section	43
	Curve wheel	44
	Sliding curve horizontal	45
	Horizontal roller curve on a section	46
	Horizontal roller curve on a basic unit / return unit	47
	Vertical curve STS, VF 65 / VF 90 / VF 120	48
	Vertical curve STS on a basic unit / return unit	52
	Assembly module	53
	Opening/closing the assembly module	54
	Profile connector STS Clean Section	55
	Return unit	56
	Basic unit	57
	Connection drive	59
	Center drive	60
7.5.3	ESD system	61
	Overview	61
	Leg sets, motor support	62
	Section on leg sets	63
	Curve wheel	64
	Installing the curve wheel drive	65
	Return unit	67
	Basic unit	68
	Connection drive	69
	Center drive	70
7.5.4	Alpine conveyor	71
	90° return unit AL, STS	71
	Alpine conveyor connection kit	72
7.5.5	Wedge conveyor	73
7.5.6	Slide rail	75
	Slide rail, (section profile)	76
	Slide rail (section profile, chain return)	77
	Slide rail (support profile), only for VF 160 / VF 240 / VF 320	78
	Slide rail (longitudinal end connection for connecting slide rails)	79
	Slide rail, AL system assembly module, only for VF 65 / VF 90 / VF 120	80
	Slide rail, STS system assembly module, only for VF 65 / VF 90 / VF 120	81
	STS slide rail, section profile	82
	STS slide rail, 30°, 45°, 90° curve wheel	83
	STS slide rail, 180° curve wheel	84
7.5.7	Conveyor chain	85
	Conveyor chain, VF 65 / VF 90 / VF 120	85
	Conveyor chain, VF 160 / VF 240 / VF 320	86
	Chain assembly tool VarioFlow ***plus***	***87***

	Closing (extending) conveyor chain, VF 65 / VF 90 / VF 120	87
	Opening (shortening) conveyor chain, VF 65 / VF 90 / VF 120	88
	Closing (extending) conveyor chain, VF 160 / VF 240 / VF 320	89
	Opening (shortening) conveyor chain, VF 160 / VF 240 / VF 320	90
	Roller cleat D35	91
7.5.8	Connection kit	93
	Connection kit passive	93
	Connection kit short passive bridge	94
	Connection kit active	95
		96
	Active connection kit, machine connection	99
	active connection kit belt (belt bridge)	102
7.5.9	Lateral guide	106
	Installing the lateral guide	106
	Lateral guide accessories	107
	Adjustable lateral guide	111
	VarioFlow ***plus*** flow control barrier	115
	Universal diverter	119
	Pressure roller	121
7.5.10	Workpiece pallet system	123
	Workpiece pallet VarioFlow	123
	Holder (PA6) for lateral guide VFplus	125
	Holder (steel) for lateral guide, WT VarioFlow	126
	Holder (steel) for lateral guide VF***plus***	***127***
	Curve wheel lateral guide VFplus	128
	Stop gate VE-VF / VE-VF/M	130
	Return stop VF WT	131
	Switch bracket VF/U	132
	Positioning unit	134
	Section transfer VarioFlow	137
	Section link VarioFlow	139
	Diverter kit	140
	Cross-diverter kit	147
	Junction kit	155
	Rocker	158
	Use with sensor	159
	Use with a pneumatic switch	160
7.5.11	Gear motor	161
	Basic unit, AL system, gear motor GM = 1 installation	161
	Basic unit, AL system, gear motor GM = 2 installation	162
	Basic unit, STS system, gear motor installation	163
	Center drive, AL /STS system, gear motor GM = 1 installation	164
	Transmission drive, AL system, gear motor GM = 1 installation	165
	Extending the adapter-transmission kit VF 160 / VF 320	166
	Curve wheel drive, gear motor installation	168
	Safety coupling adjustment	169
	Safety coupling modification	171
7.6	Making the electrical connection to the product	172
8	**Start-up**	**175**
8.1	Initial start-up	175

ENGLISH

8.2	Re-commissioning after a standstill	175
9	**Operation**	**176**
9.1	Notes regarding operation	176
9.1.1	Wear	176
9.1.2	Measures to reduce wear	176
9.1.3	Environmental factors	176
10	**Maintenance and repair**	**177**
10.1	Cleaning and care	177
10.2	Inspection	177
	Conveyor chain	177
	Slide rails	179
	Sliding curves	179
	Roller curves	179
	System as a whole	179
	Wear of conveyor chains	180
10.3	Maintenance	181
	Bearings	181
	Gear	181
	Motor	181
10.4	Replacement of wear parts	181
	Required tools	181
	Conveyor chain	181
	Slide rails	181
	Drive gears	182
10.5	Spare parts	183
11	**Decommissioning**	**183**
12	**Disassembly and replacement**	**183**
12.1	Preparing the product for storage/later use	183
13	**Disposal**	**184**
14	**Upgrading and modification**	**184**
15	**Troubleshooting and repair**	**184**
16	**Technical data**	**185**
16.1	Ambient conditions	185

1 About this documentation

1.1 Validity of the documentation

This documentation applies to the following products:
• 3 842 998 291, drive kit head drive, connection drive, center drive (VF*plus* Var)
• 3 842 998 742, drive kit curve wheel drive (VF*plus* Curve Var)

This documentation is intended for fitters, operators, service engineers and system end users.
This documentation contains important information relating to the safe and proper assembly, transportation, start-up, operation, use, maintenance and disassembly of the product, and on how to rectify simple faults yourself.

▶ Read this documentation in full prior to working with the product, particularly section 2 “Safety instructions” and section 3 “General notes on property and product damage”.

1.2 Required and supplementary documentation

▶ Only start up the product if the documentation marked with the book symbol 🕮 is available and you have understood and followed the instructions in it.

Table 1: Required and supplementary documentation

	Title	Document number	Document type
🕮	Employee safety training	3 842 527 147	
🕮	Declaration of incorporation	3 842 358 761	
	MT*pro*[1)]	3842 539 057	MT spare parts list

1) Download from: **www.boschrexroth.com/mtpro**

1.3 Presentation of information

Standardized safety instructions, symbols, terms and abbreviations are used so that you can use this documentation to work quickly and safely with your product. These are explained in the following sections to help you understand them better.

1.1.1 Safety instructions

This document contains safety instructions in section 2.6 “Product-specific safety instructions” and section 3 “General notes on property and product damage”, as well as before any sequence of actions or any required action which involves a risk of personal injury or property damage. Be sure to observe all safety precautions.

ENGLISH

Safety instructions are set out as follows:

⚠ SIGNAL WORD

Type and source of danger!
Consequences of non-compliance
▶ Measures to prevent danger
▶ ...

- **Warning sign:** points out the danger
- **Signal word:** indicates the severity of the danger
- **Type and source of danger:** indicates the type and source of the danger
- **Consequences:** describes the consequences of non-compliance
- **Prevention:** states how the danger can be avoided

Table 2: Risk classes according to ANSI Z535.6-2006

Warning sign, signal word	Meaning
⚠ DANGER	Indicates a hazardous situation that will result in serious injury or death if not avoided.
⚠ WARNING	Indicates a hazardous situation that may result in severe injury or death if not avoided.
⚠ CAUTION	Indicates a hazardous situation that may result in minor to moderate injury if not avoided.
NOTICE	Property damage: the product or the surrounding area could get damaged.

1.1.2 Symbols

The following symbols indicate important information that is not safety-relevant but increases the comprehensibility of the documentation.

Table 3: Meaning of the symbols

Symbol	Meaning
ℹ	If this information is not observed, the product cannot be used and/or operated as designed.
▶	Single, independent action
1. 2. 3.	Numbered steps: the numbers indicate that the steps must be performed in order.

2 Safety instructions

The residual risks mentioned here concern the individual components/modules described in these instructions.
The residual risks listed here do not replace the required risk assessments and tests to be performed in each individual case by the creator and user of chain conveyor systems built from the Bosch Rexroth components. A residual risk assessment of the system, which was built from Bosch Rexroth components, is not part of the components supplied (see also 2.8 Operator responsibilities).

2.1 About this section

The product has been manufactured in accordance with the generally accepted rules of current technology. Nevertheless, there is a risk of personal injury and property damage if you do not read this section and follow the safety instructions in this document.

- ▶ Read this documentation carefully and completely before you start working with the product.
- ▶ Keep these instructions accessible to all users at all times.
- ▶ Always include them when giving the product to a third party.

2.2 Intended use

The product is an incomplete machine.
You may use the product as follows:
• for installation in a Rexroth VarioFlow *plus* transfer system
• For the maximum load / section load see Technical Data on page 185.
• For the ambient conditions, see page 185.

The product is strictly intended for professional use and not for private use.
Intended use also includes having read and understood these instructions, especially section 2 “Safety instructions”.

2.3 Improper use

Any use other than that described in the section “Intended use” is considered improper and is not permitted.
Bosch Rexroth AG is not liable for any damage resulting from improper use. The user alone bears any risks associated with improper use.
The following foreseeable misuses also constitute improper use:
• Transporting goods other than those specified.
• Transporting people on the product or transported material.
• Persons climbing onto the product
  – the product must not be walked on or climbed onto.
• Private use.

ENGLISH

2.4 Personnel qualifications

The activities described in this document require a basic knowledge of mechanical, electrical and pneumatic systems, as well as familiarity with the corresponding technical terms. Additional knowledge regarding the use of lifting gear and corresponding slings is required for transporting and handling the product. To ensure safe use, these activities should therefore only be performed by qualified personnel or by an instructed person acting under the direction of such a person.

“Qualified personnel” refers to those who can recognize potential hazards and take appropriate safety measures based on their technical training, knowledge, experience, and understanding of the relevant regulations pertaining to the work being performed. Qualified personnel must comply with the relevant technical regulations and have the necessary expertise.
In the case of pneumatic products, for example, expertise means:
- The ability to read and fully understand pneumatic diagrams.
- Thorough understanding of the interactions between safety equipment in particular.
- Understanding the function and design of pneumatic components.

Bosch Rexroth offers training support for specialized fields. You can find an overview of the training content online at: http://www.boschrexroth.de/didactic

2.5 General safety instructions

- Observe the applicable accident prevention and environmental protection regulations.
- Observe the safety rules and regulations of the country in which the product is being used.
- Only use Rexroth products that are in proper working order.
- Heed all the notices on the product.
- People who install/assemble, operate, disassemble or service Rexroth products must not be under the influence of alcohol, drugs or pharmaceutical medications that affect their reactions.
- Use only original accessories and spare parts from Rexroth in order to prevent hazards to people due to unsuitable spare parts.
- Observe the technical data and ambient conditions specified in the product documentation.
- Only start up the product if it has been determined that the end product (for example, a machine or system) into which the Rexroth products have been installed complies with national provisions, safety regulations and application standards.

2.6 Product-specific safety instructions

General
- Do not attempt to modify the product.
- Do not expose the product to any mechanical loads under any circumstances. Never use the product as a handhold or step. Do not place any objects on the product.
- Always ensure that the product cannot topple over.

During transport
- Observe the transport instructions on the packaging.
- Inspect the product for obvious transport damage.

During installation
- Lay cables and lines so that they cannot be damaged and no one can trip over them.
- Make sure the system component you are working on is depressurized and de-energized before assembling the product or inserting or removing plugs.
- Ensure that the system component cannot be switched back on.
- Before start-up, make sure that all seals and plugs for the screwed connections are correctly installed and undamaged to prevent fluids and debris from infiltrating the product.

During start-up

- Allow the product to acclimatize for a few hours prior to start-up in order to prevent water condensation from forming in the housing.
- Make sure that all the electrical and pneumatic connections are either in use or covered.
- Check the safety requirements according to DIN EN 619.
- Only start up a product that has been completely installed.
- Make sure that all the safety equipment which forms part of the product is present, has been properly installed, and is fully functional. Do not move, bypass or disable any safety equipment.
- Do not reach into moving parts.
- Check the product for malfunctions.

During operation

- Make sure that only authorized personnel perform the following tasks within the scope of the product's intended use:
  – Starting or operating the system, or interfering with its normal operation.
  – Operating component or part adjusters.
- Only allow people to be in the immediate vicinity of the product when it is operating if they are authorized by the operator to be there. This also applies when the product is idle.
- Make sure that:
  – There are no obstacles preventing access to the EMERGENCY STOP controls.
  – All delivery points, workstations and passages are kept clear.
- Do not use EMERGENCY STOP controls for routine stopping.
- Regularly check the EMERGENCY STOP controls to ensure that they are functioning properly.
- Following an EMERGENCY STOP or in the event of a fault or other irregularity, turn the product off and secure it against being switched back on.
- Do not reach into moving parts.
- An idle system is not necessarily a safe system, as stored energy can be released unintentionally or through improper maintenance procedures.

EMERGENCY STOP, malfunction

- After an EMERGENCY STOP or a malfunction, only switch the system back on once you have established and rectified the cause of the fault.

During maintenance and servicing

- Make sure that access to maintenance and inspection points is kept unobstructed.
- Perform the prescribed maintenance work at the intervals specified in section 10.3 "Maintenance".
- Make sure that no line connectors, connections or components are disconnected as long as the system is supplied with pressure and voltage. Secure the system against being switched back on.

During disposal

- Dispose of the product in accordance with the regulations in your country.

2.7 Personal protective equipment

- Appropriate protective clothing should be worn when handling/using the product (e.g. safety shoes, close-fitting clothing, a hair net for long, loose hair).
  As the system user or operator, you are personally responsible for ensuring the use of appropriate protective equipment when the product is being used.
  All component parts of the personal protective equipment must be free of damage.

2.8 Operator responsibilities

- Before the initial start-up or re-commissioning of a conveyor system, carry out a risk assessment in accordance with DIN EN ISO 12100.
  The residual risks mentioned in this manual can only serve as examples for the operating instructions and risk assessment of the individually designed conveyor system. The warranty is void if original spare parts are not used.
- Provide safety training to the operating personnel before starting up the product for the first time or after a prolonged period, and then at regular intervals.

3 General notes on property and product damage

The warranty only applies to the delivered configuration.

- The warranty is void in the event of faulty installation, start-up and operation, as well as improper use and/or improper handling.

During cleaning

- Prevent cleaning agents from getting into the system.
- Never use solvents or corrosive cleaning agents.
- Do not use a pressure washer for cleaning.

4 Scope of delivery

The scope of delivery includes the following:

- Various VarioFlow *plus* modules in accordance with your order. Please use the shipping documents to check that the consignment is complete.
- 1 assembly instructions "VarioFlow *plus* modules"

4.1 Condition on delivery

- Modules fully or partially assembled

5 About this product

5.1 Specifications

1.1.3 Use of VarioFlow *plus* modules

- Standardized modules for assembly into a conveyor system for use in the food & packaging industries, healthcare, assembly lines, the automotive & electronics industries, or the interlinking of machines.

1.1.4 Design of VarioFlow *plus* modules

- Basic version made of aluminum (AL system)
- Stainless steel version for more stringent hygiene requirements (STS system)
- Workpiece pallet system for parts that cannot be transported directly on the conveyor chain.

5.2 Product description

A: foot
B: strut profile
E: straight section
H: holder
K: curve wheel
M: horizontal sliding curve
N: roller curve
O: vertical sliding curve
P: assembly module
Q: return unit
R: basic unit
U: conveyor chain
V: lateral guide
W: drive kit

[1]) Size shown

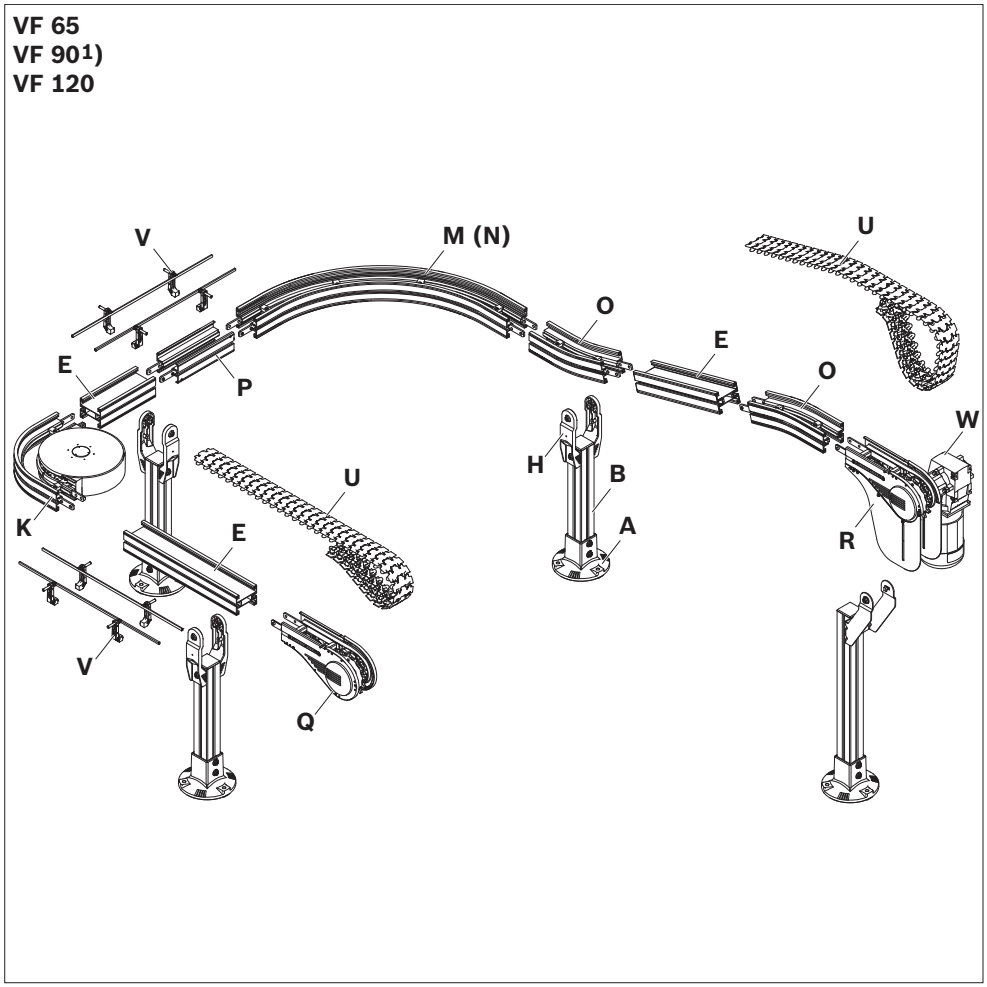

562 411-01

Fig. 1: VarioFlow *plus* modules

5.3 Identification of the product

A: material number (order number)

B: designation

C: production date

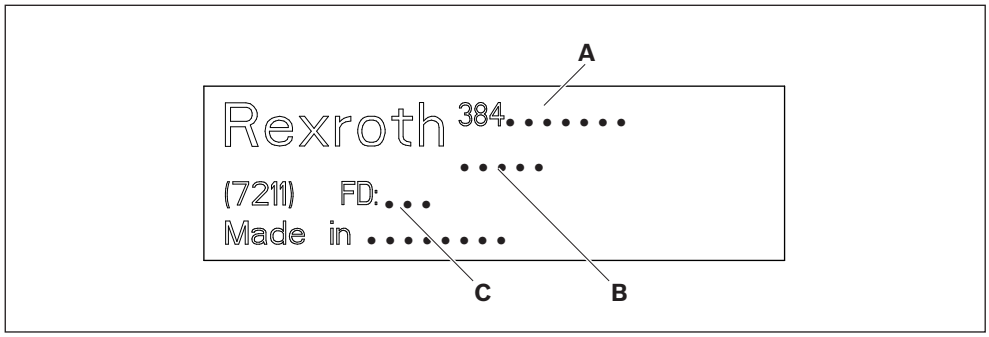

Fig. 2: Nameplate

6 Transport and storage

- Observe the transport instructions on the packaging.
- See the delivery documents for the transport weight
- Secure the product to prevent toppling!
- Always maintain ambient conditions during loading and transport, see page 185.

6.1 Transporting the product

⚠ WARNING

Suspended loads can fall!
Falling objects can result in serious injury (or even death).
- ▶ Use only slings with sufficiently high bearing load capacity (for product weight see delivery documents).
- ▶ Make sure the lifting straps are correctly fastened before lifting the product!
- ▶ Secure the product against tipping over when lifting!
- ▶ Make sure that no one but the operator is in the danger zone during lifting and lowering!

6.2 Storing the product

- Only set the product down on a flat surface.
- Protect the product from mechanical stress.
- Protect the product from environmental influences such as dirt and humidity.
- Observe the ambient conditions, see page 185.
- Support the product so that there is no load on motors that are installed in a suspended position.

7 Assembly

7.1 Unpacking

- ▶ Lift the product out of its packaging.
- ▶ Dispose of the packaging material in accordance with the applicable regulations in your country.

7.2 Installation requirements

- ▶ During installation, be sure to maintain the ambient conditions specified in the Technical Data (see page 185).

1.1.5 Installation position

- ▶ Install the product level and plumb, at right angles, and axially parallel. This ensures proper functioning and prevents premature wear.

7.3 Required tools

- Hex wrench SW13
- Hex socket wrenches SW3, SW4, SW5
- Pozidriv screwdriver, PZ2
- Hammer/rubber mallet
- Level
- Chain assembly tool (3842 557 025)
- Slide rail assembly tool (3842 549 738)
- Drilling jig (3842 553 518)
- Miter cutter (3842 547 982)
- Safety coupling adjustment tool (3842 549 388)
- Lateral guide bending tool (3842 528 531)

7.4 Symbols used

Table 4: Symbols used

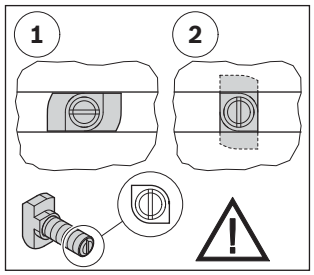	Connection with T-bolt and flange nut. Make sure the T-bolt is in the correct position when inserting into the slot and tightening. The notch at the head of the bolt indicates the orientation of the T-bolt. 1 = T-bolt insertion position in the slot 2 = T-bolt clamping position in the slot Tightening torque: 25 Nm
 $M_D = 20Nm$	Hex wrench SW = wrench size ... mm M_D = required tightening torque ... Nm
 $M_D = 8Nm$	Hex socket wrench SW = wrench size ... mm M_D = required tightening torque ... Nm
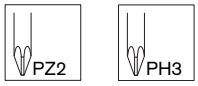	Screwdrivers for cross-head screws PZ ... = Pozidriv screw drive size ... PH ... = Phillips screw drive size ...
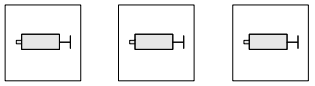	Lubricate with specific grease lubricant: • gleitmo 585 K: gleitmo 585 K, www.fuchs-lubritech.com • Anti-Seize: Food Grade Anti-Seize/Loctite 8014, www.henkel.com
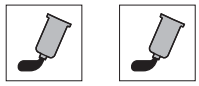	Secure the screws with: • Loctite 243: medium-strength (detachable), www.loctite.de • Loctite 601: high-strength screw retention (non-detachable), www.loctite.de
	The marked parts are not required for the described assembly. Dispose of the parts or use them for other purposes.
1 2 3	Graphical depiction of the installation steps. The numbers correspond to the sequence of installation steps, in accordance with the instructions in the accompanying text.
A B C X	Graphical depiction of the designation of components. The letters denote the components mentioned in the accompanying text.
	Detail view from a different direction, for example, the back or the bottom side of the product.
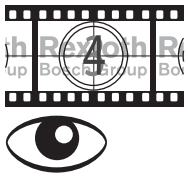	Assembly videos are available for downloading at **www.boschrexroth.com**, ☞ service ☞ downloads ☞ VarioFlow *plus* assembly of the system • http://dc-emea.resource.bosch.com/media/de/service_4/downloads_2/montagetechnik_2/VFplus_Service_-_Allgemein_SD_480p.m4v • http://dc-emea.resource.bosch.com/media/de/service_4/downloads_2/montagetechnik_2/VFplus_Service_-_Detail_SD_480p.m4v

7.5 Installing the product

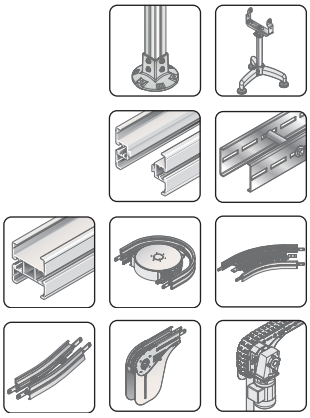

Assembly sequence for a VarioFlow *plus* system:

1. Install the leg sets
   (AL system see page 18, STS system see page 40).

2. Install the open-type section profiles
   (AL system see page 19, STS system see page 41).

3. Install the section modules on leg sets.
   - Straight section (AL system see page 21, STS system see page 43).
   - Curve wheel (AL system see page 22, STS system see page 44).
   - Curve wheel drive (only for AL system, see page 24).
   - Horizontal curve (AL system see page 25, STS system see page 46).
   - Vertical curve (AL system see page 28, STS system see page 48).
   - Assembly module (AL system see page 33, STS system see page 53).
   - Connection drive (AL system see page 26, STS system see page 59).
   - Center drive (AL system see page 39, STS system see page 60).
   - Return unit (AL system see page 35, STS system see page 56).
   - Basic unit (AL system see page 36, STS system see page 57).

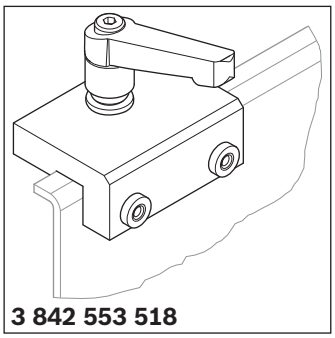

Fig. 3: Drilling jig

Please note:
In the course of assembly the user must drill holes in the section profile and support profile for subsequent retention of the slide rail.
- In the case of the section profile, you can drill the holes before or after assembly.
- In the case of the support profile, you should drill the holes before assembly.
- In the case of the AL system, there is a groove in the section profile and support profile to guide drilling.
- In the case of the STS system, you need the **3842 553 518**drilling jig which can be attached on both sides flush with the end of the section profile or support profile.

4. For VarioFlow *plus* 160, ..240, ..320 only:
   Install the support profile (see straight section, curves, return unit, head drive).
5. Install the slide rail (see page 76 and following).
6. Install the conveyor chain (see page 85 and following).
7. Install the lateral guide (see page 106 and following).
8. Install the drive unit (see page 161 and following).

ENGLISH

1.1.6 AL system

Leg sets

Required accessories:
- Foot (A)
- Strut profile (B)
- Cover cap (C)
- Floor dowel (D)
- Washer (E)

A_1:	**3842 544 875**
A_2:	**3842 540 173**
B_1:	**3842 990 350/L**
B_2:	**3842 993 133/L**
C_1:	**3842 511 876**
C_2:	**3842 529 039**
D:	**3842 540 668**
E:	**3842 546 717** (t = 1 mm) **3842 546 718** (t = 3 mm)

▶ Install the supports.

Please note:
Make sure that the leg sets and the VarioFlow *plus* modules cannot topple over during installation until you screw the system to the floor.

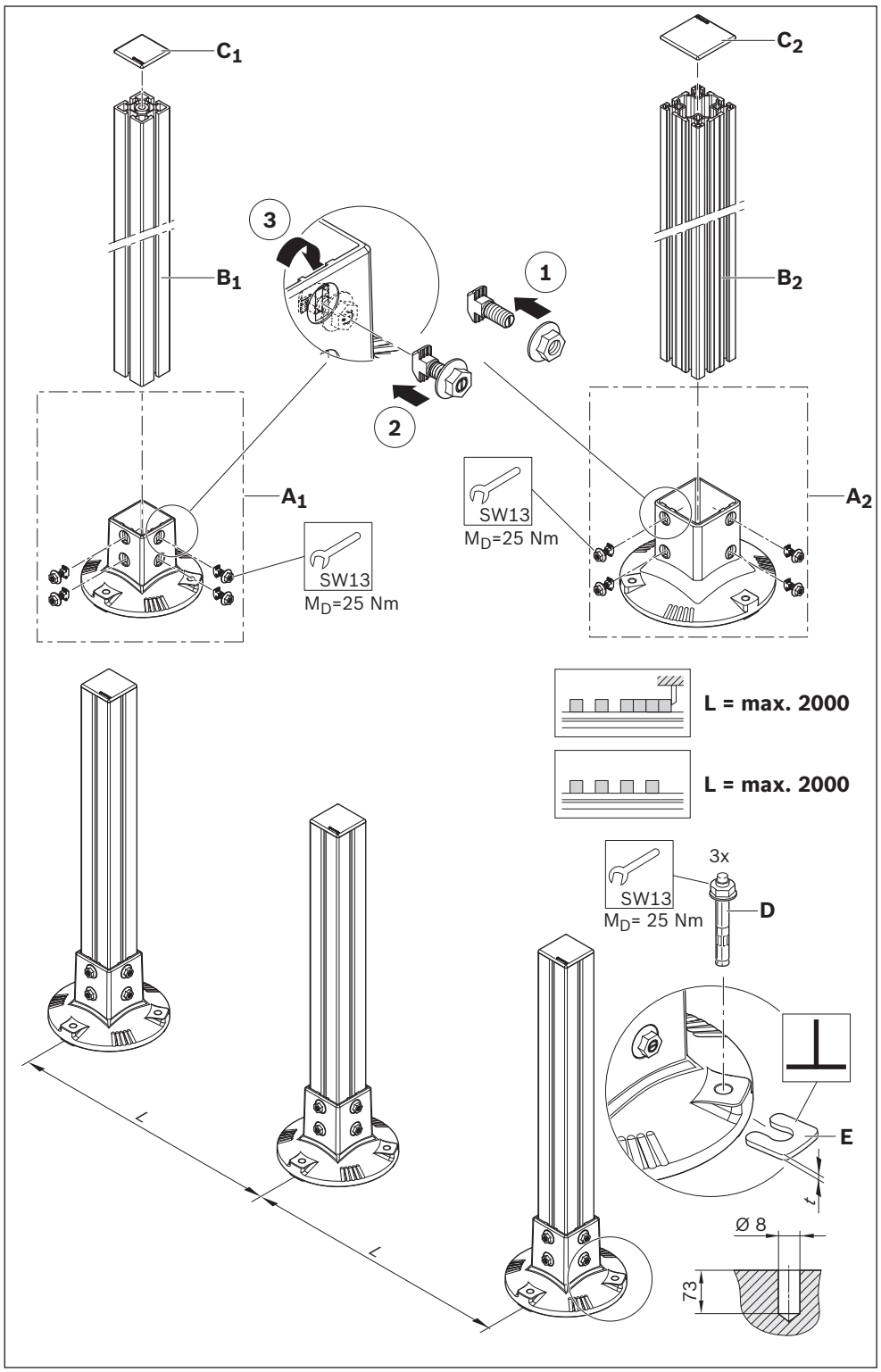

Fig. 4: AL system, installing leg sets

Required accessories:
- Section profile (F)
- Cross connector (G)
- Support profile (H, only for VF 160 / VF 240 / VF 320)

F,	
6070 mm:	**3842 546 647**
3000 mm:	**3842 546 670**
L mm:	**3842 996 026/L**
G, VF 65:	**3842 546 672**
G, VF 90:	**3842 546 673**
G, VF 120:	**3842 546 674**
G, VF 160:	**3842 546 675**
G, VF 240:	**3842 546 676**
G, VF 320:	**3842 546 677**

▶ Install the open-type section profiles.

Please note:
- Install the support profile (H) last, after the curves, return unit, and drive.
- The support profile (H) extends into the curves, see pages 25, 28.
- In order to fix the slide rail in place, drill holes must be made in the support profile prior to assembly, positions as shown on pages 25, 28, 35.

H,	
6070 mm:	**3842 546 705**
3000 mm:	**3842 547 904**
L mm:	**3842 996 028/L**

[1]) Size shown

Installing open-type section profiles

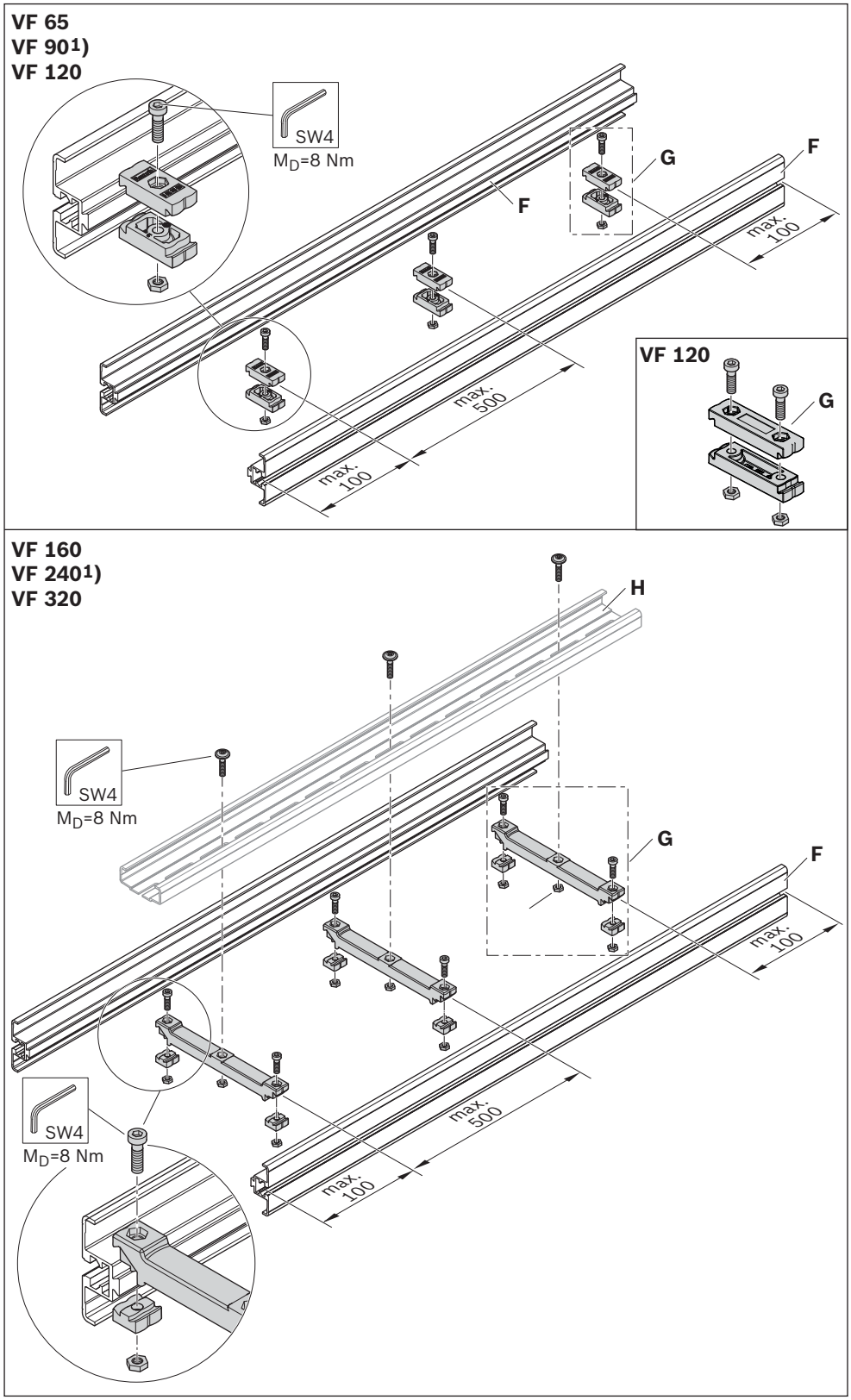

Fig. 5: AL system, pre-assembling open-type section profiles

ENGLISH

Required accessories:
• Holder (J)

J, VF 65:	**3842 546 625**
J, VF 90:	**3842 546 626**
J, VF 120:	**3842 546 627**
J, VF 160:	**3842 546 628**
J, VF 240:	**3842 546 629**
J, VF 320:	**3842 546 630**

▶ Install the section profile on the supports.

Please note:
Make sure that the leg sets and the VarioFlow *plus* modules cannot topple over during installation until you screw the system to the floor.

[1]) Size shown

Section on leg sets

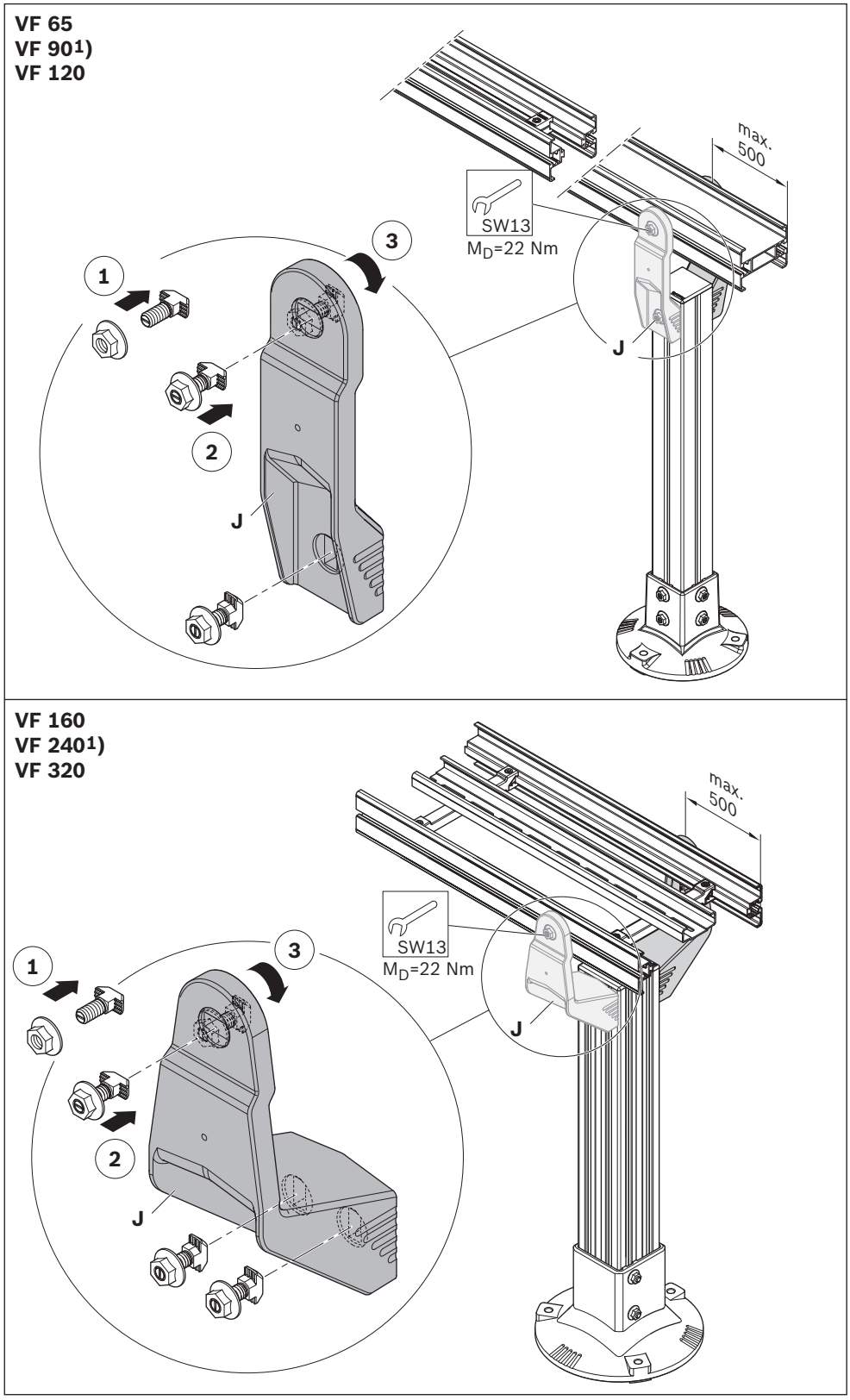

Fig. 6: AL system, installing section on leg sets

Required accessories:
• Profile connector (K)

K: **3842 530 277**

[1]) Size shown

Straight section

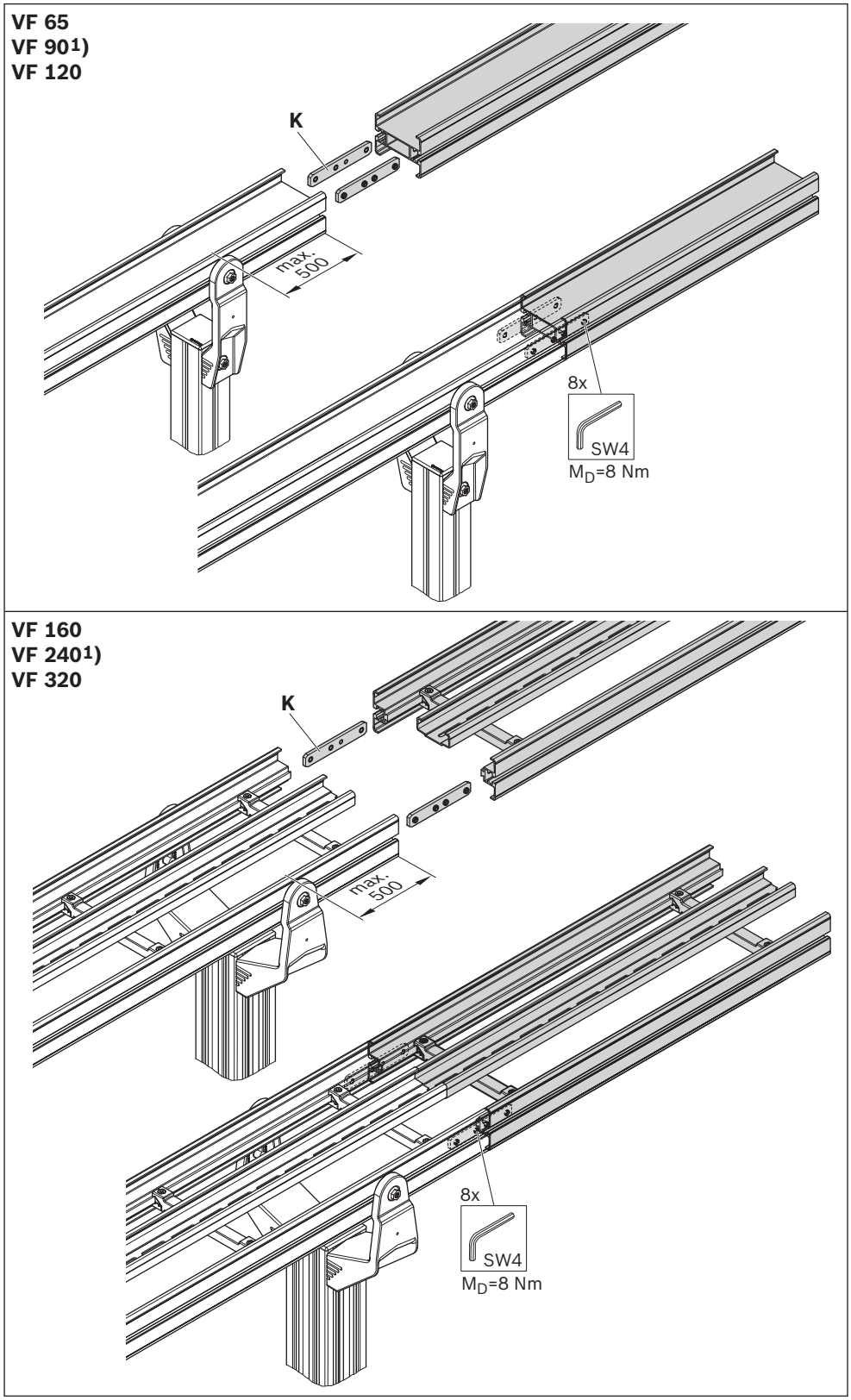

Fig. 7: AL system, installing straight section

ENGLISH

Required accessories:
- Curve wheel (L)
- Only if required: Protective cover (M)

L, VF 65,
30°: **3842 547 048**
45°: **3842 547 049**
90°: **3842 547 050**
180°: **3842 547 051**

L, VF 90,
30°: **3842 547 052**
45°: **3842 547 053**
90°: **3842 547 054**
180°: **3842 547 055**

L, VF 120,
30°: **3842 547 056**
45°: **3842 547 057**
90°: **3842 547 058**
180°: **3842 547 059**

M, VF 65,
30°: **3842 551 545**
45°: **3842 551 546**
90°: **3842 551 547**
180°: **3842 551 548**

M, VF 90,
30°: **3842 551 549**
45°: **3842 551 550**
90°: **3842 551 551**
180°: **3842 551 552**

[1]) Size shown

[2]) Drilled hole for fixing the slide rail on the chain inlet (top = conveying), see page 75 and following. Use the drilling jig **3842 553 518**

[3]) Drilled hole for fixing the slide rail on the chain inlet (bottom side = chain return), see page 75 and following. Use the drilling jig **3842 553 518**

Curve wheel

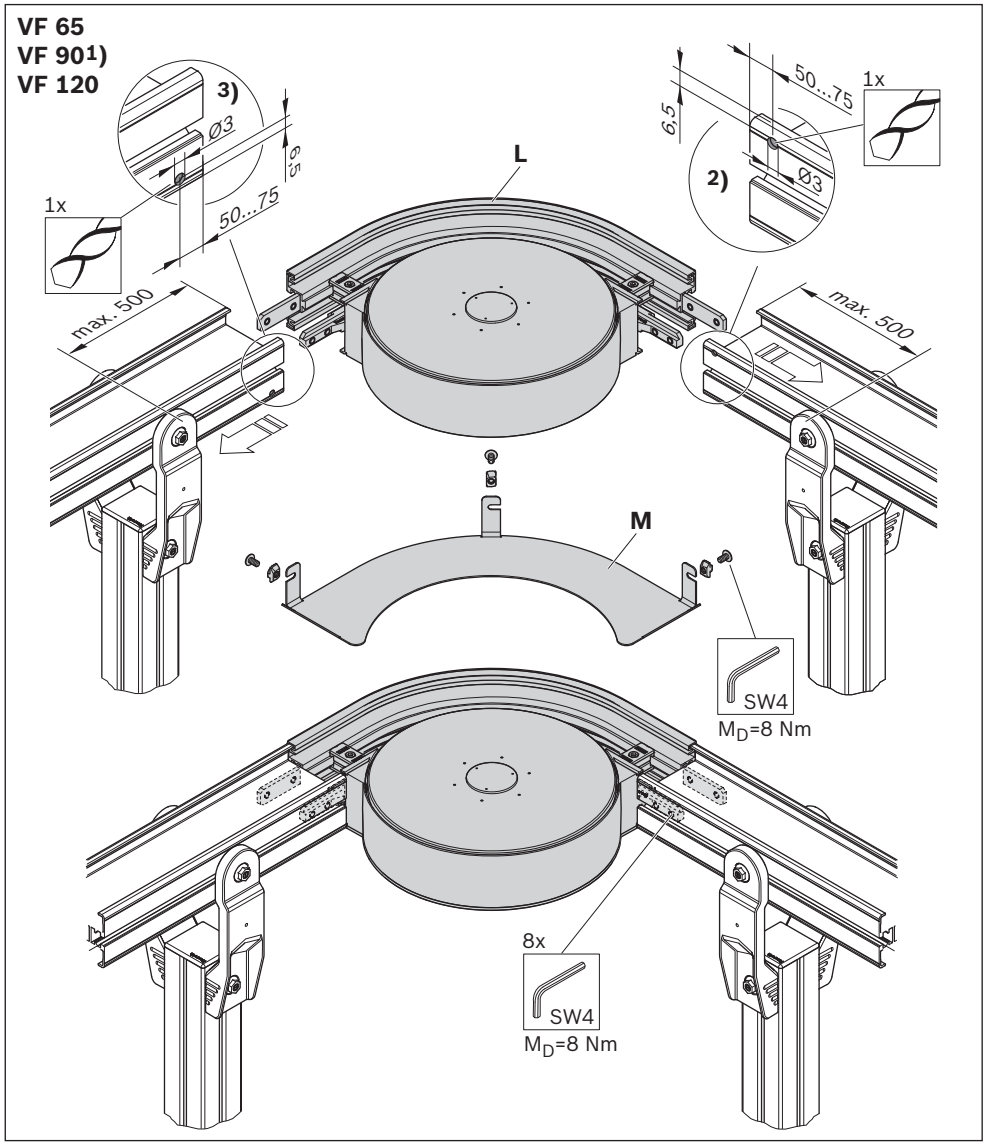

Fig. 8: AL system, installing curve wheel

Please note:
For circuit systems without chain return in the bottom run (using a curve wheel or connection drive), use the protective cover (M) and closed profiles as a safety guard to prevent access from below.

Required accessories:
- Curve wheel 180° (N)
- Drive kit (O), installation of the gear motor, see page 168.

N, VF 65:	**3842 547 380**
N, VF 90:	**3842 547 381**
O:	**3842 998 742**

1. Install the curve wheel.
2. Install the cover (x) on the mounting bracket (y).
3. Tighten the screws (z) until they are flush with the outer surface.
4. Install the flange (O) in the correct position (see [3]), flange can only be installed in the correct position).

Please note:
- Support the curve wheel drive (leg set is not included in the scope of delivery).
- Make sure that the leg sets and the VarioFlow *plus* modules cannot topple over during installation until you screw the system to the floor.

For further information, please refer to page 24.

[1]) Size shown

[2]) Drilled hole for fixing the slide rail, see page 75 and following. Use the drilling jig **3842 553 518**

Installing the curve wheel drive

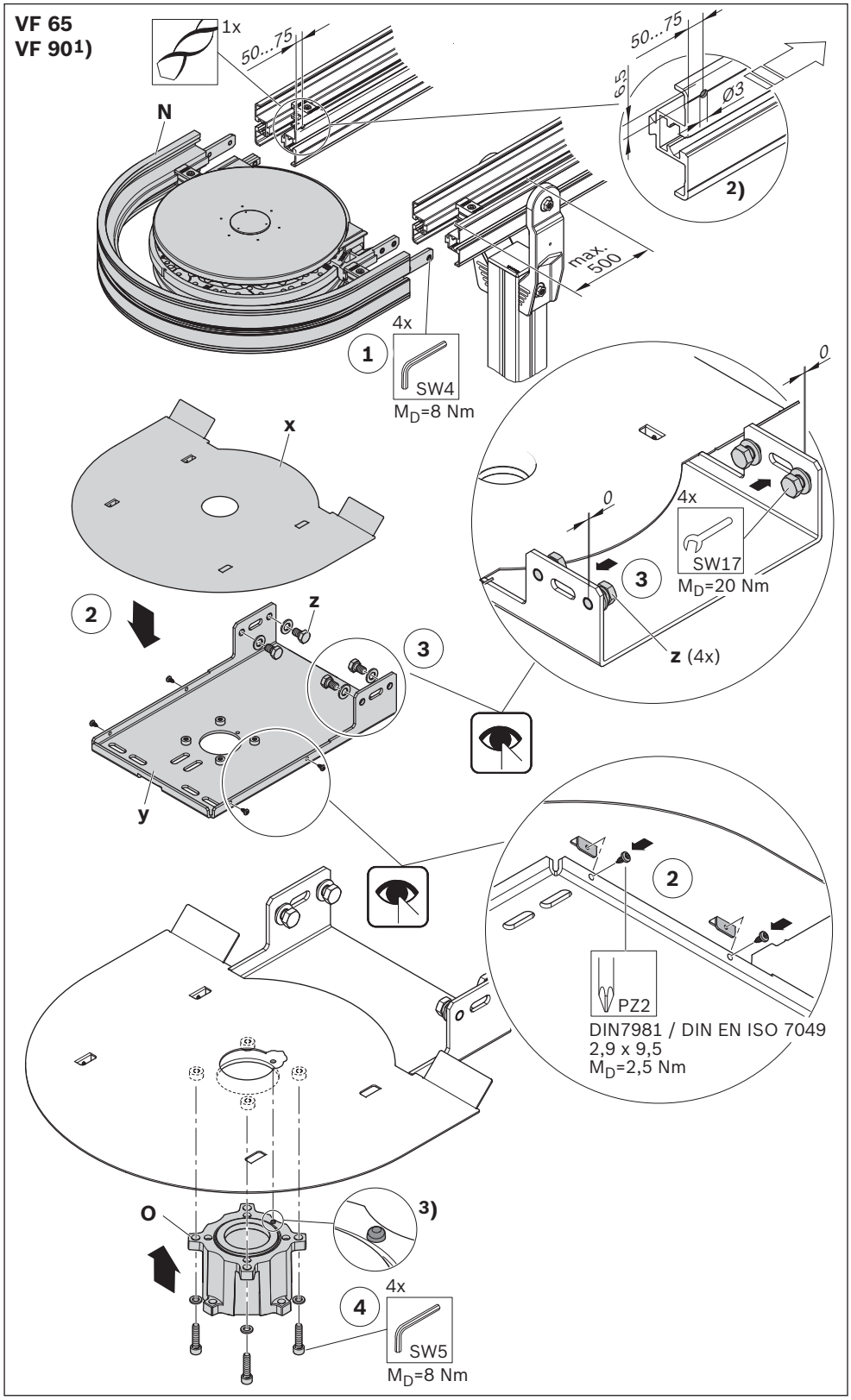

Fig. 9: AL system, installing curve wheel drive

ENGLISH

5. Install the pre-assembled mounting bracket (y).
6. Install the support (v).
7. Install the leg set (P, not included in the scope of delivery).

▶ Further assembly steps:
- Slide rail installation, see page 75.
- Gear motor installation, see page 168.

[1]) Size shown

[2]) Drilled hole for fixing the slide rail, see page 75 and following. Use the drilling jig **3842 553 518**

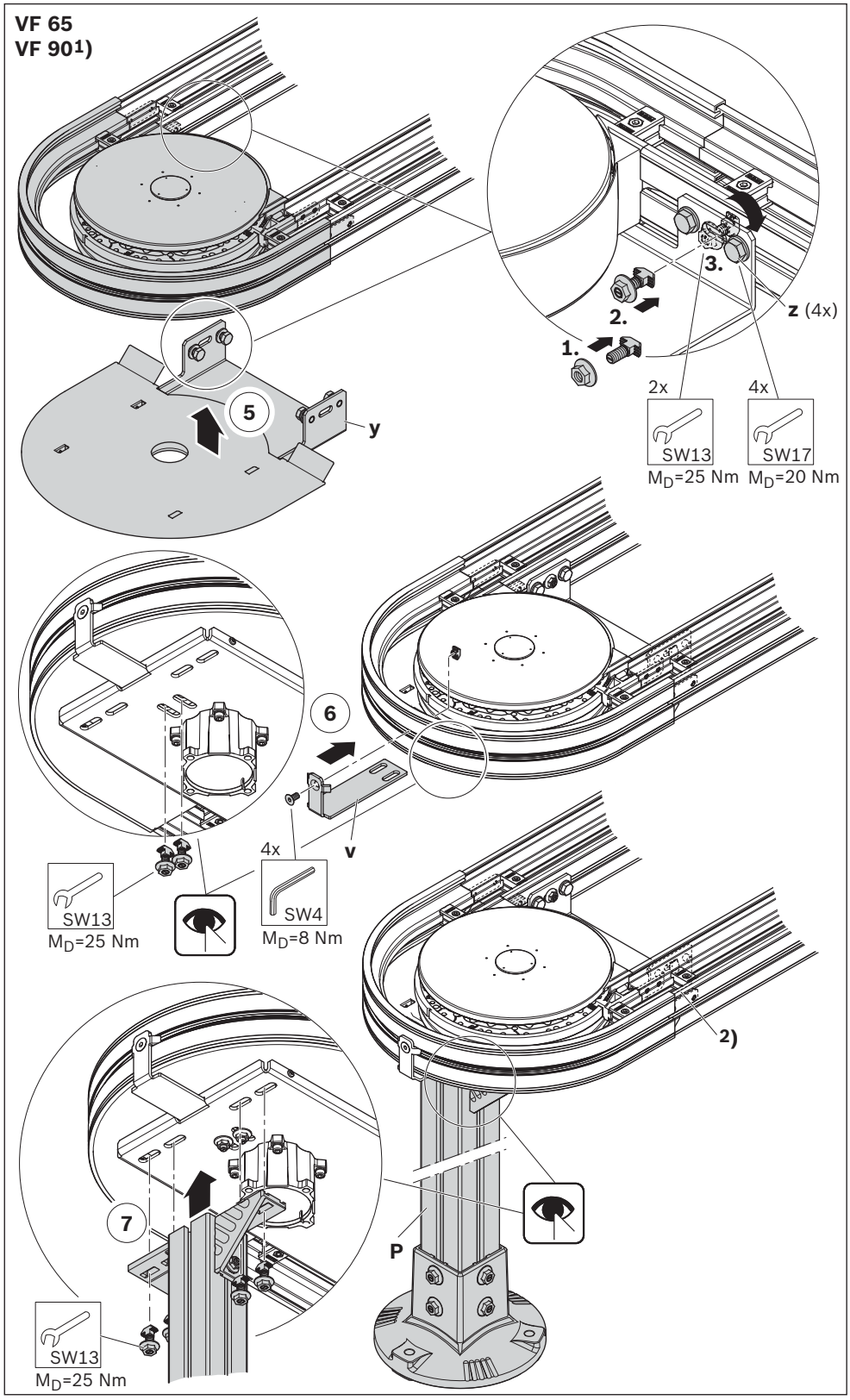

Fig. 10: AL system, installing curve wheel drive

Required accessories:
- Sliding curve horizontal (Q)

Q, VF 65,
30°, R700: **3842 547 072**
45°, R700: **3842 547 073**
90°, R700: **3842 547 074**

Q, VF 90,
45°, R500: **3842 547 075**
90°, R500: **3842 547 076**
30°, R700: **3842 547 077**
45°, R700: **3842 547 078**
90°, R700: **3842 547 079**

Q, VF 120,
30°, R700: **3842 547 080**
45°, R700: **3842 547 081**
90°, R700: **3842 547 082**

[1]) Size shown

Sliding curve horizontal

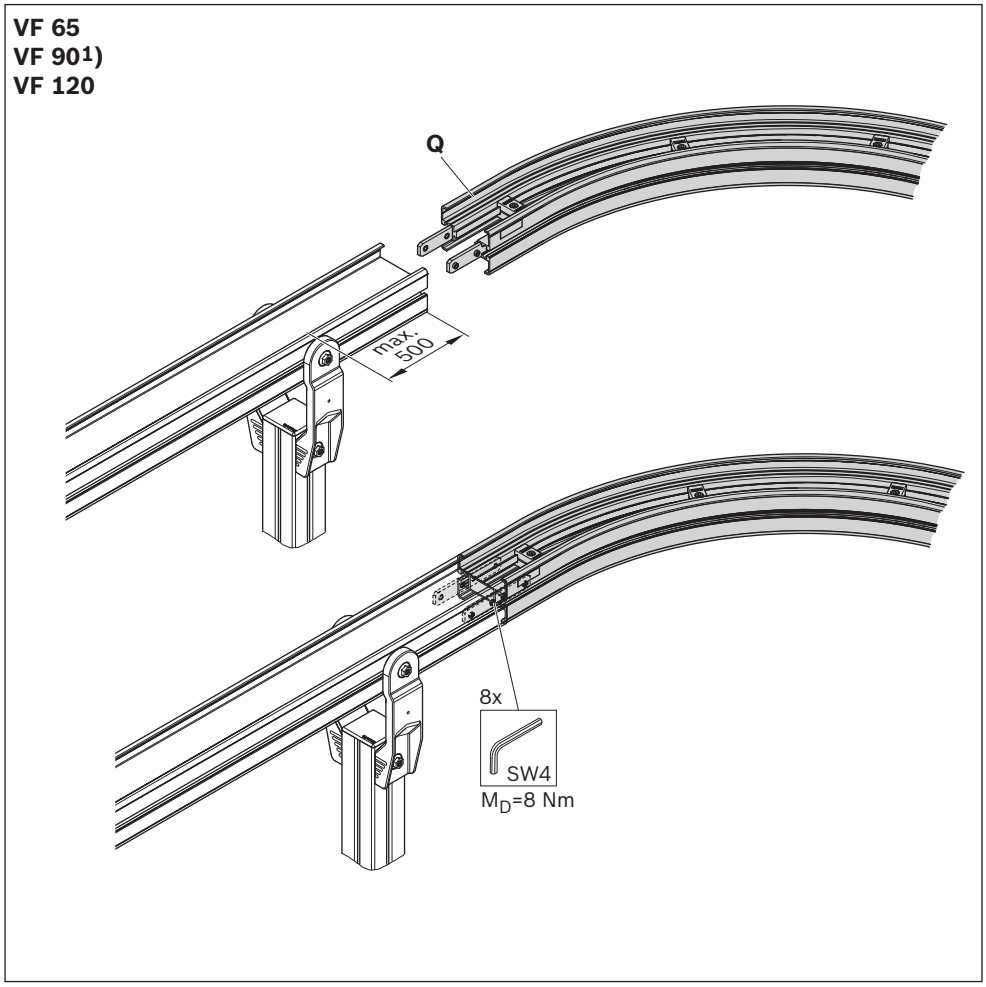

Fig. 11: AL system, installing horizontal sliding curve

Please note:
The friction which arises in sliding curves increases the required chain tensile force. Therefore, in the case of sliding curves, always use the Advanced or Premium slide rails for the entire system.

ENGLISH

Required accessories:
- Horizontal roller curve (R)

R, VF 160,
30°: **3842 547 060**
45°: **3842 547 061**
90°: **3842 547 062**
180°: **3842 547 063**

R, VF 240,
30°: **3842 547 064**
45°: **3842 547 065**
90°: **3842 547 066**
180°: **3842 547 067**

R, VF 320,
30°: **3842 547 068**
45°: **3842 547 069**
90°: **3842 547 070**
180°: **3842 547 071**

Please note:
The chain guide must not touch the roller, (see [3])). The roller must be able to move freely, the gap dimension is to be observed.

[1]) Size shown
[2]) Drilled hole for fixing the slide rail, see page 75 and following.
[4]) Use the drilling jig **3842 553 518**

Horizontal roller curve on a section

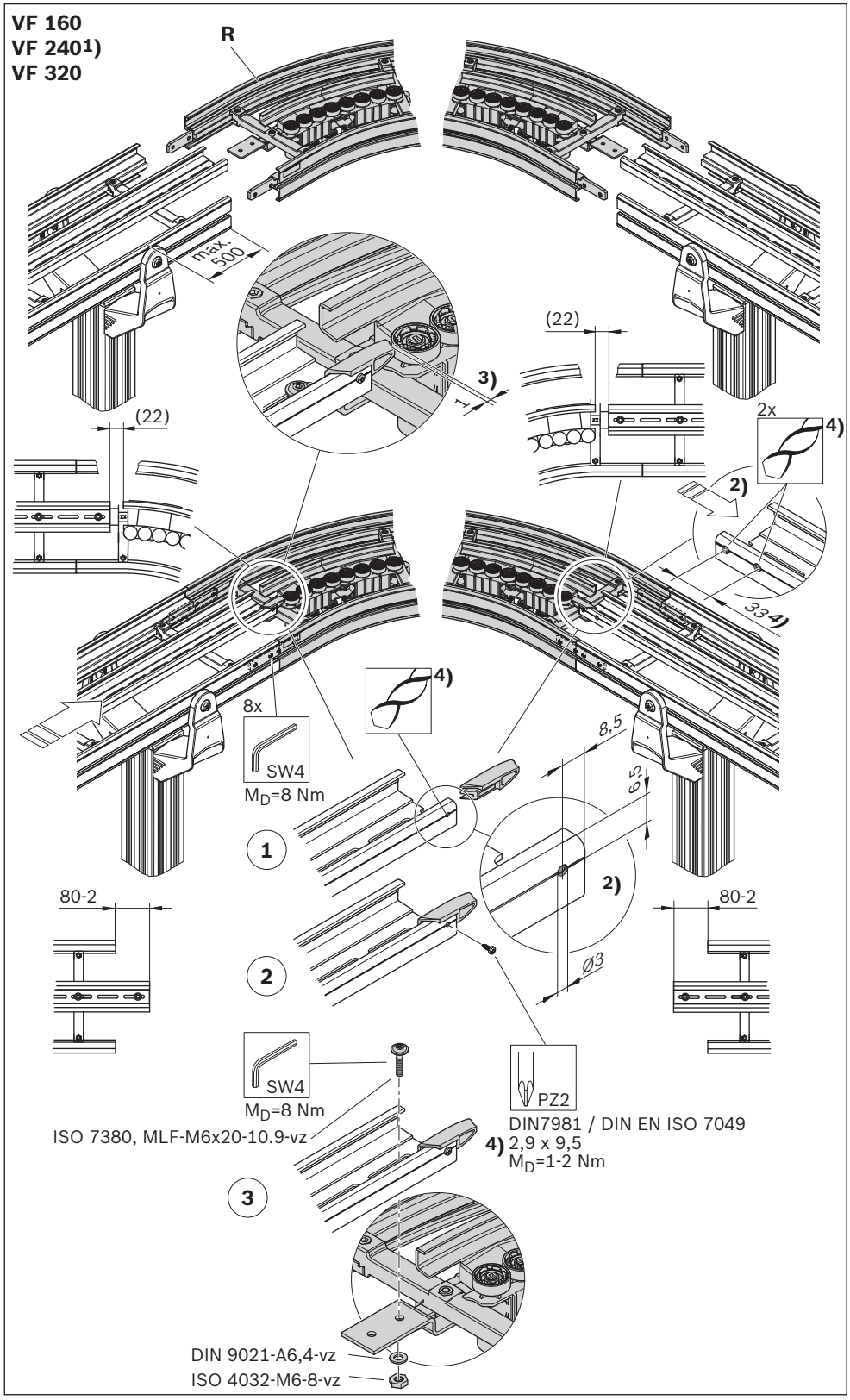

Fig. 12: AL system, installing horizontal roller curve on a section

Please note:
The chain guide must not touch the roller, (see [3])). The roller must be able to move freely, the gap dimension is to be observed.

[1]) Size shown
[2]) Drilled hole for fixing the slide rail, see page 75 and following.
[3]) Use the drilling jig
3842 553 518

Horizontal roller curve on a basic unit / return unit

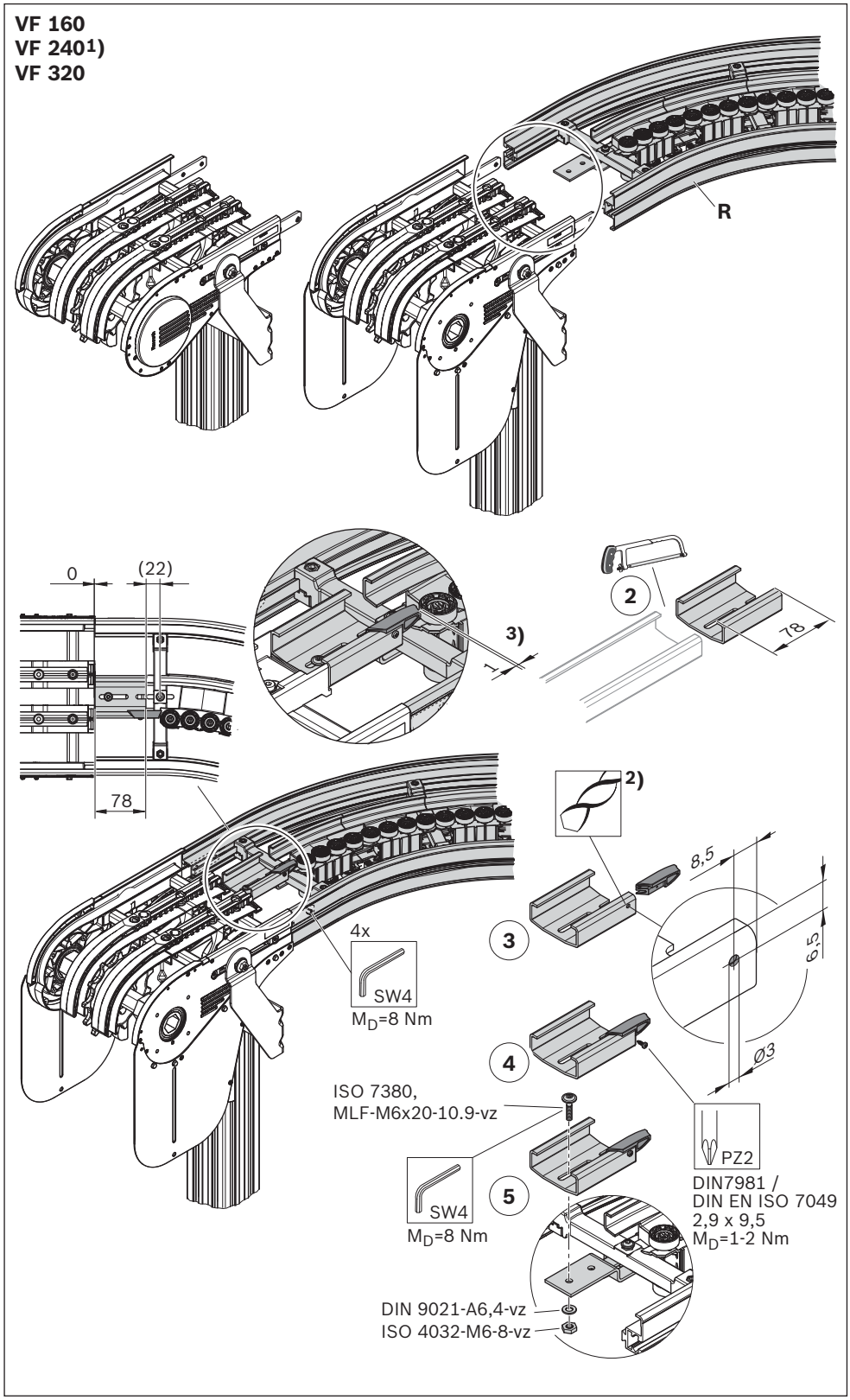

Fig. 13: AL system, installing horizontal roller curve on a basic unit / return unit

ENGLISH

Required accessories:
- Vertical curve AL (S)

S, VF 65,

5°, R500:	**3842 547 083**
7.5°, R500:	**3842 547 084**
15°, R500:	**3842 547 085**
30°, R500:	**3842 547 086**
45°, R500:	**3842 547 087**
90°, R500:	**3842 559 126**

S, VF 90,

5°, R500:	**3842 547 088**
7.5°, R500:	**3842 547 089**
15°, R500:	**3842 547 090**
30°, R500:	**3842 547 091**
45°, R500:	**3842 547 092**
90°, R500:	**3842 559 127**

S, VF 120,

5°, R500:	**3842 547 093**
7.5°, R500:	**3842 547 094**
15°, R500:	**3842 547 095**
30°, R500:	**3842 547 096**
45°, R500:	**3842 547 097**
90°, R500:	**3842 559 128**

Please note:
The friction which arises in vertical curves increases the required chain tensile force.
Therefore, in the case of vertical curves, always use the Advanced or Premium slide rails for the entire system. See slide rail installation, page 75 and following.

[1]) Size shown

Profile connector adjustable 0-5°

Required accessories:
- Profile connector adjustable 0–5° (T)

T: **3842 559 130**

Vertical curve AL, VF 65 / VF 90 / VF 120

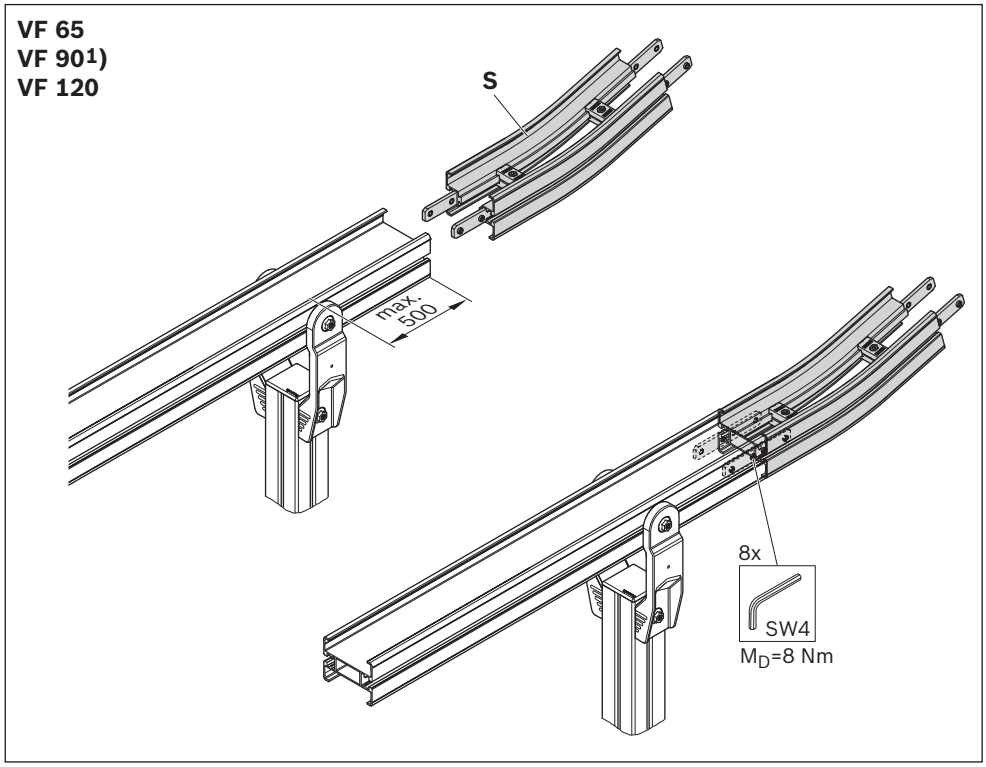

562 411-14

Fig. 14: AL system, installing vertical curve AL, VF 65 / VF 90 / VF 120

Profile connector adjustable 0–5°

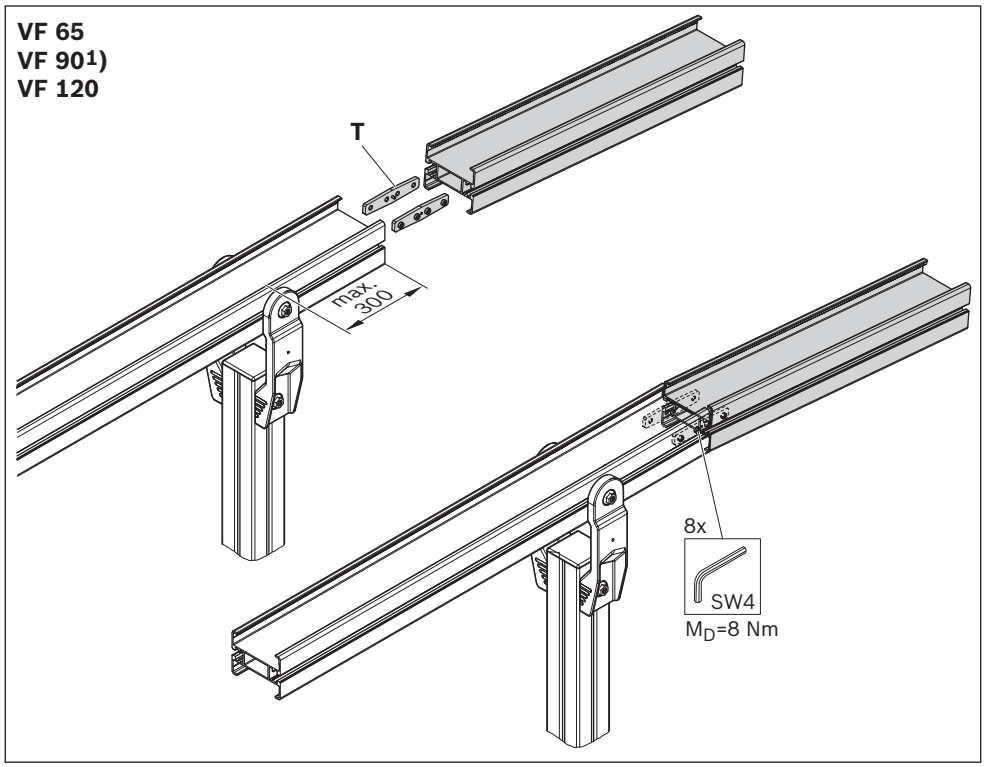

562 411-15

Fig. 15: AL system, installing profile connector adjustable 0-5°

Required accessories:
- Vertical curve AL (S)
- Slide rail Advanced or Premium

3842 546 116

S, VF 160,
5°, R500: **3842 547 098**
7.5°, R500: **3842 547 099**
15°, R500: **3842 547 100**
30°, R500: **3842 547 101**
45°, R500: **3842 547 102**

S, VF 240,
5°, R500: **3842 547 103**
7.5°, R500: **3842 547 104**
15°, R500: **3842 547 105**
30°, R500: **3842 547 106**

S, VF 320,
5°, R500: **3842 547 107**
7.5°, R500: **3842 547 108**
15°, R500: **3842 547 109**
30°, R500: **3842 547 110**

1. Install the chain guides.
2. Install the slide rail.

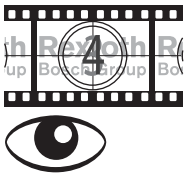

[1]) Size shown

[2]) Running direction of the return chain on the bottom side of the profile.

Vertical curve AL, VF 160 / VF 240 / VF 320

First install the slide rails and chain guides for the chain return on the bottom side of the curve.

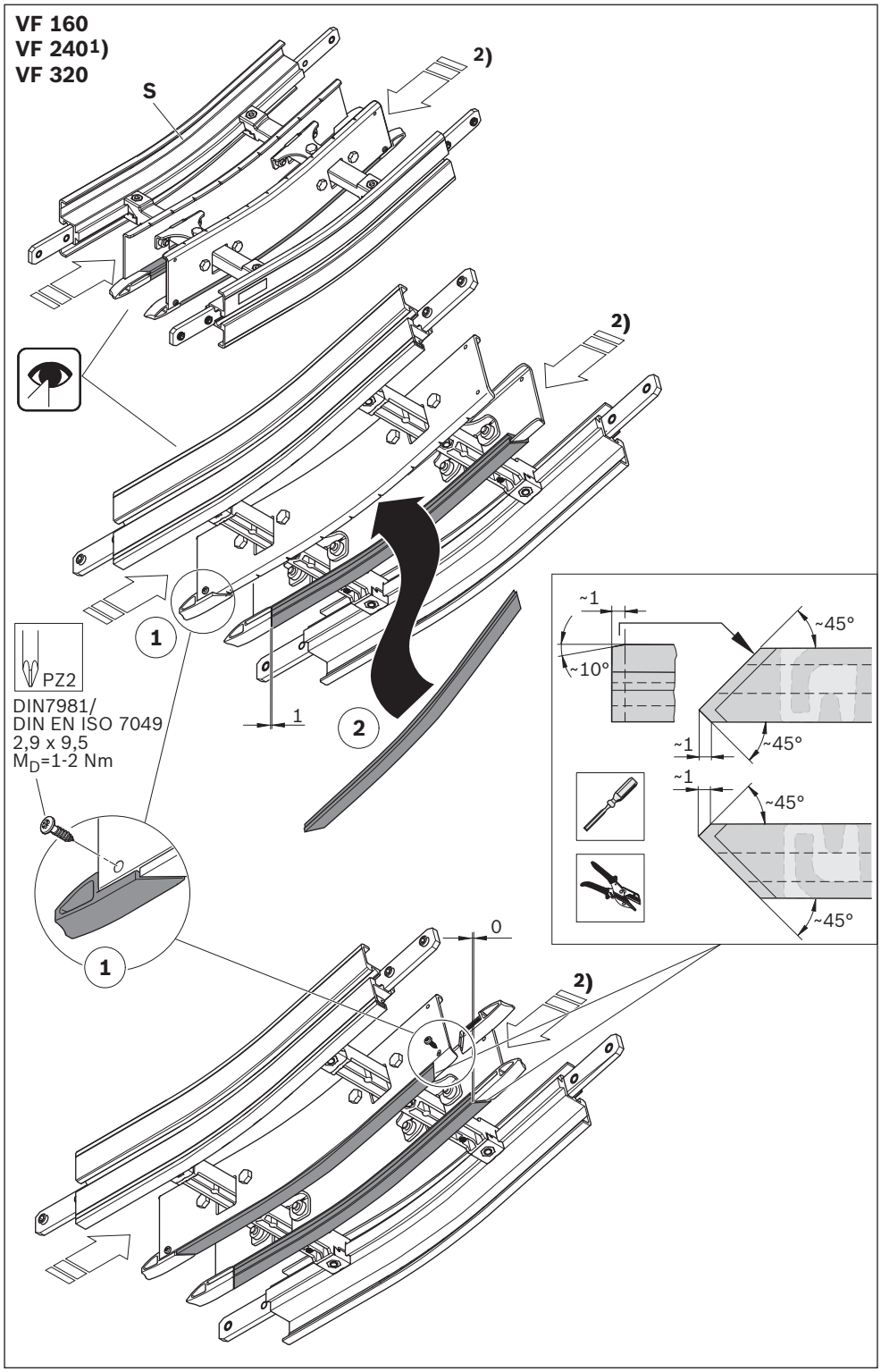

Fig. 16: AL system, vertical curve AL, upwards: installing slide rail for chain return

1. Install the chain guides.
2. Install the slide rail.

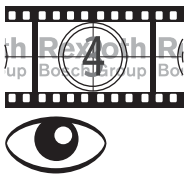

[1]) Size shown

[2]) Running direction of the return chain on the bottom side of the profile.

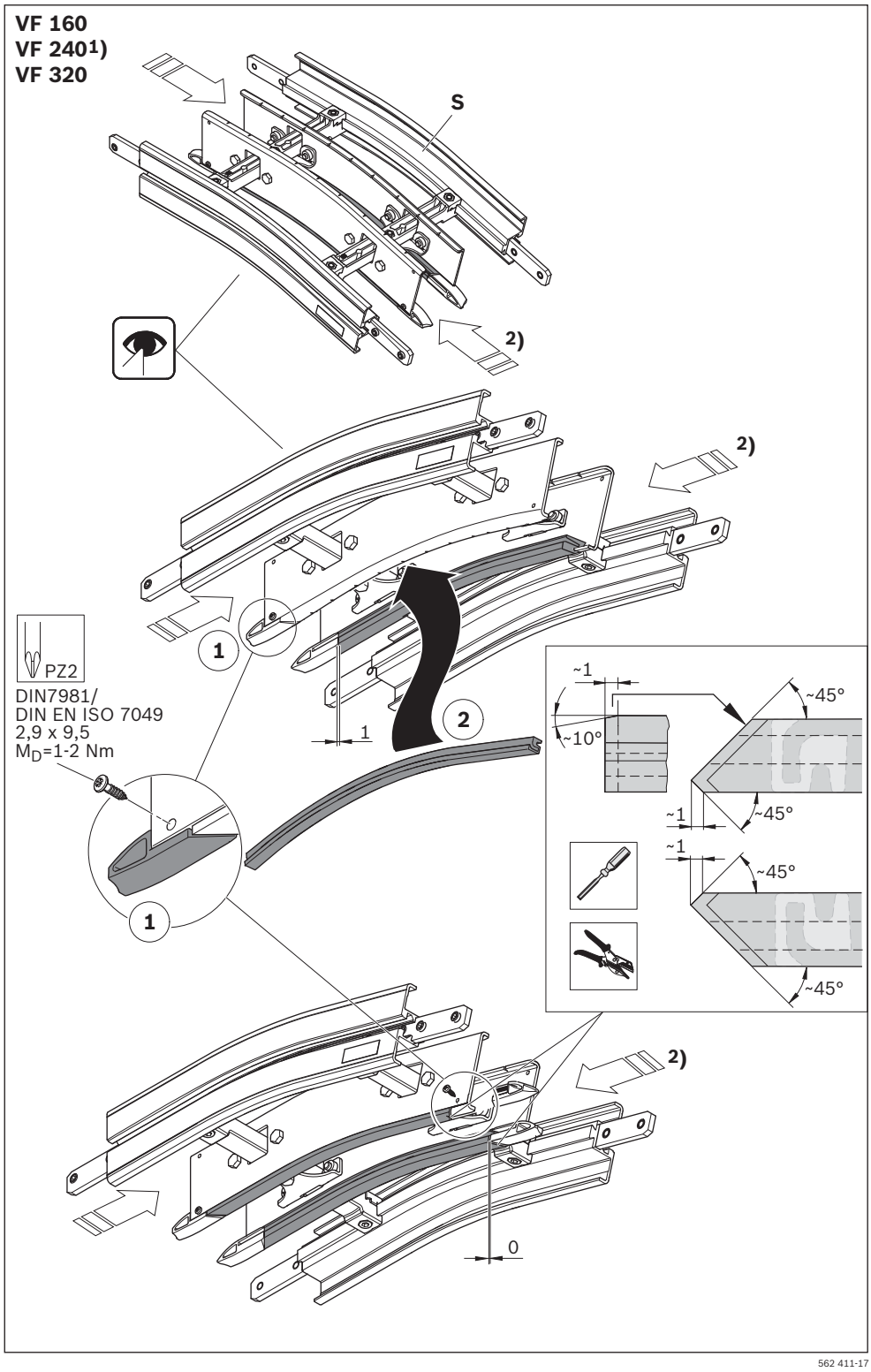

Fig. 17: AL system, vertical curve AL, downwards: installing slide rail for chain return

Please note:
The friction which arises in vertical curves increases the required chain tensile force.
Therefore, in the case of vertical curves, always use the Advanced or Premium slide rails for the entire system. See slide rail installation, page 75 and following.

[1]) Size shown

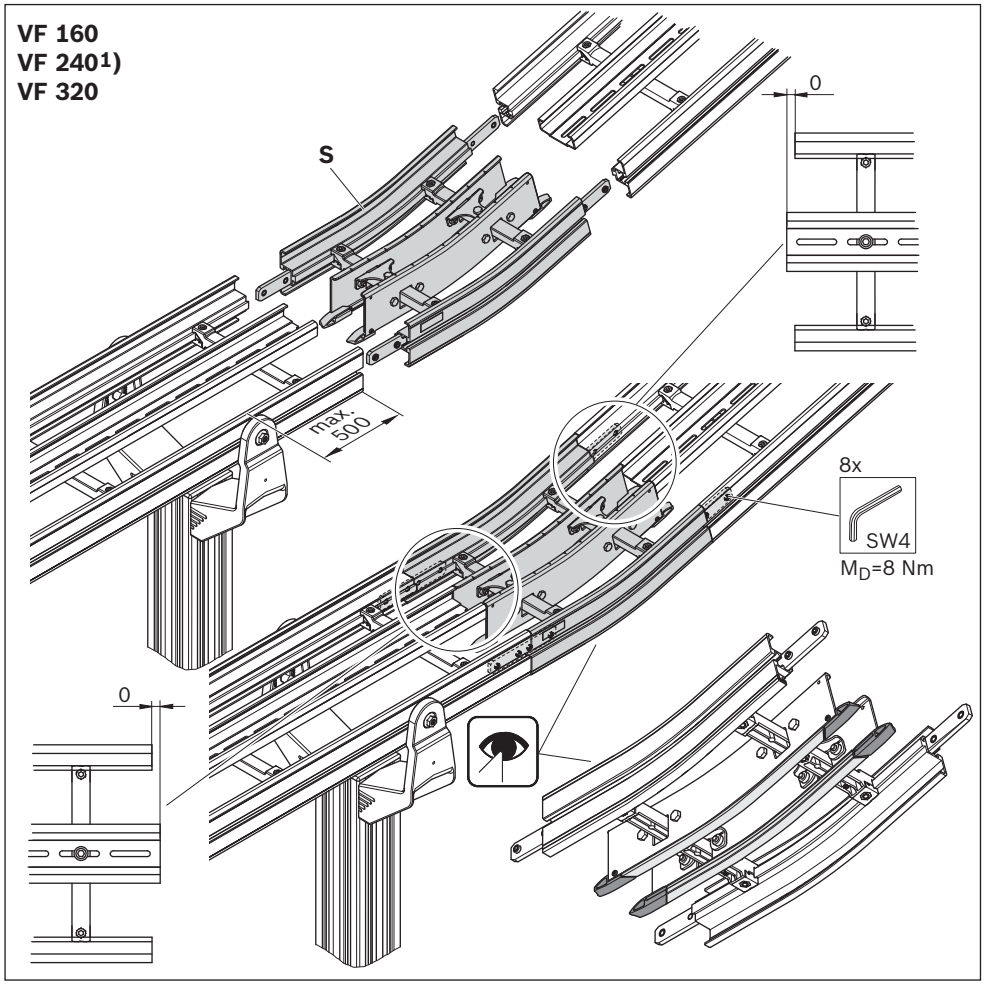

Fig. 18: AL system, installing vertical curve AL, VF 160 / VF 240 / VF 320

ENGLISH

Please note:
The friction which arises in vertical curves increases the required chain tensile force.
Therefore, in the case of vertical curves, always use the Advanced or Premium slide rails for the entire system. See slide rail installation, page 75 and following.

[1]) Size shown

Vertical curve AL on a basic unit / return unit

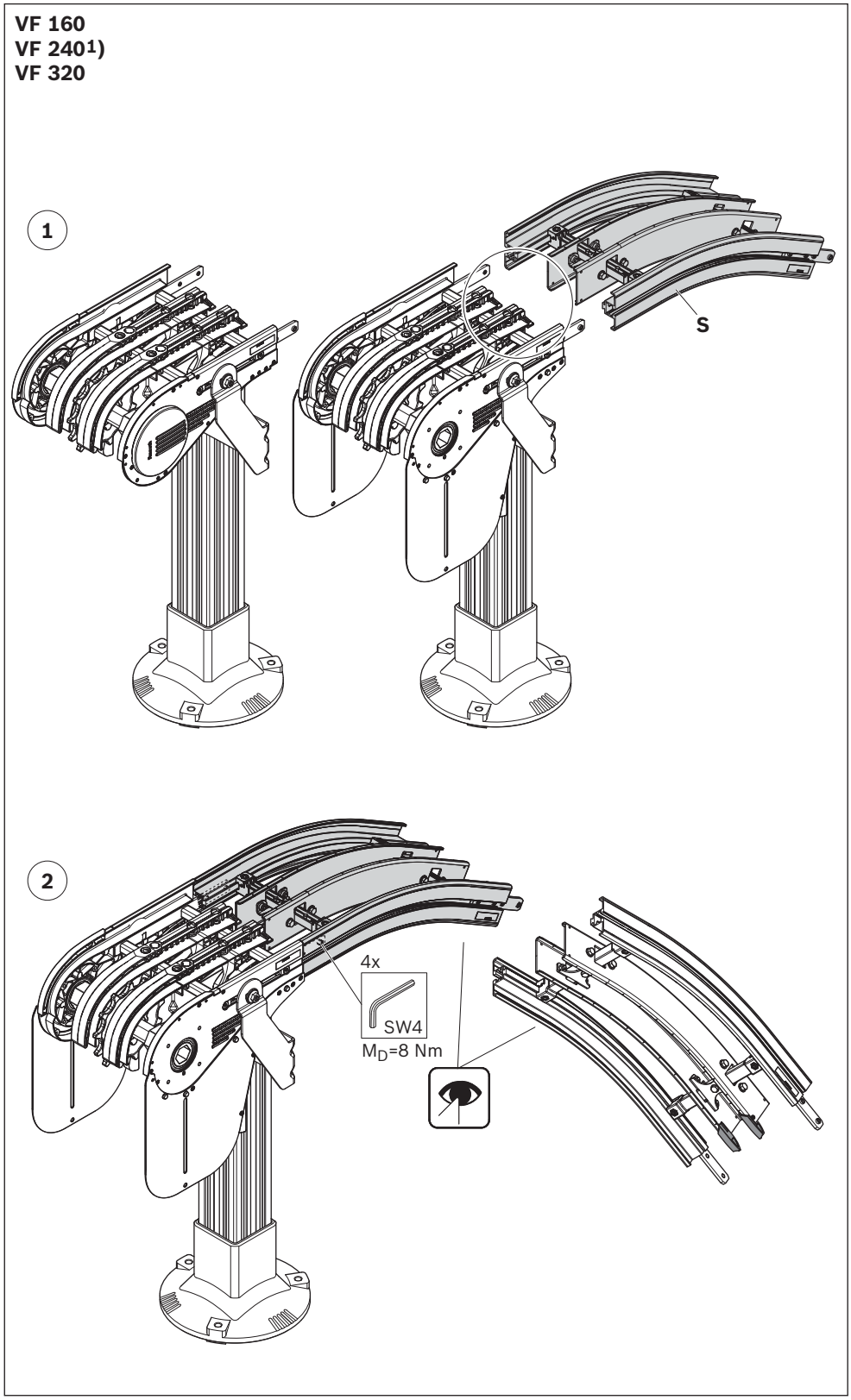

Fig. 19: AL system, installing vertical curve AL on a basic unit / return unit

Required accessories
- Assembly module (U)

U: **3842 547 899**

Please note:
- Install the assembly module where it can be easily accessed during subsequent operation. This facilitates the installation, inspection, and replacement of the conveyor chain.
- The drilled holes for fixing the slide rail in position (see [2])) must be towards the front in the conveying direction.
- Slide rail interruption is only required on the side to be opened.
- For sizes 160-320: Do not interrupt the support profile with slide rail to increase smooth running.

[1]) Size shown

[2]) Drilled hole for fixing the slide rail, see page 75 and following. Use the drilling jig **3842 553 518**

Assembly module

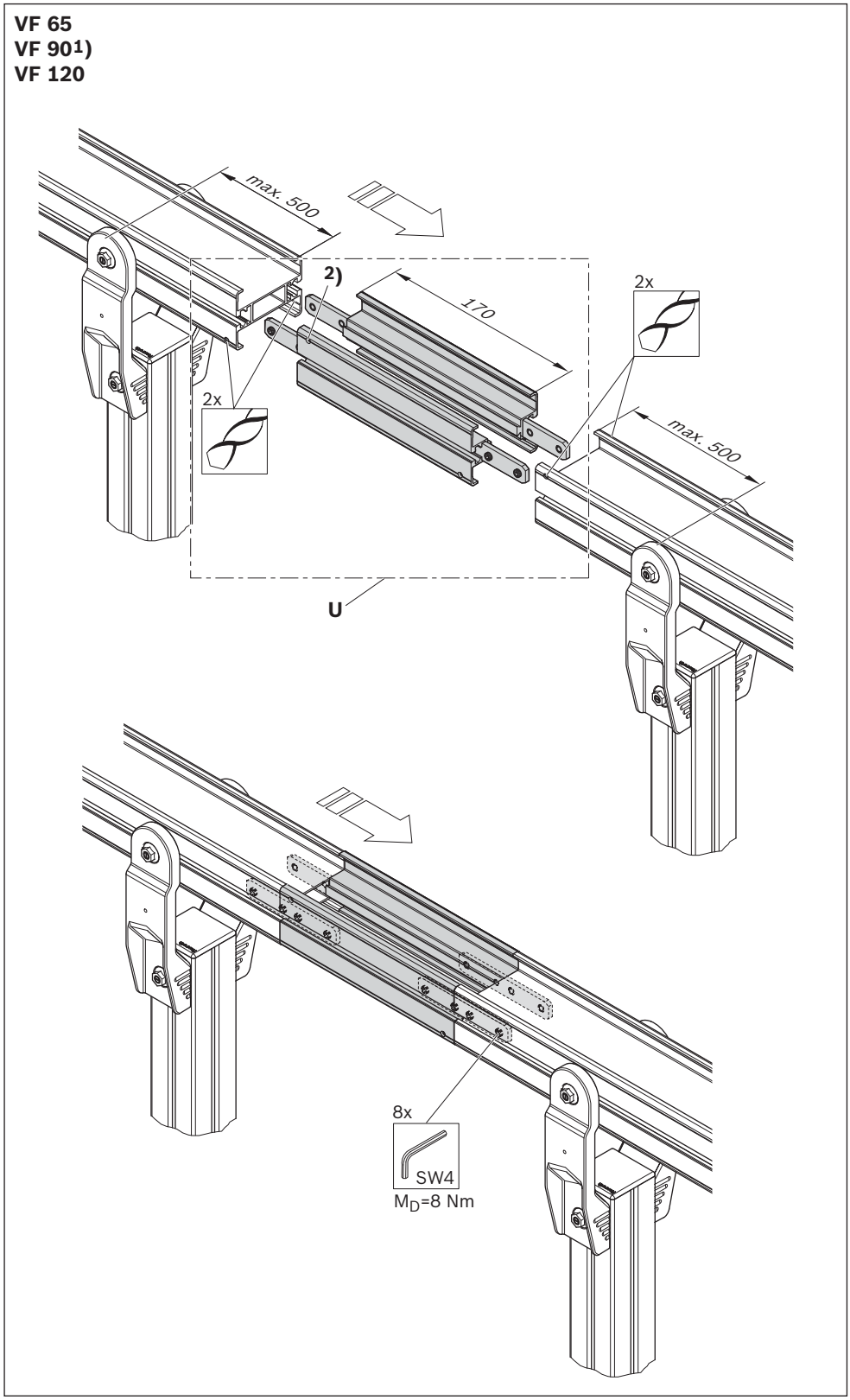

Fig. 20: AL system, installing assembly module

Opening/closing the assembly module

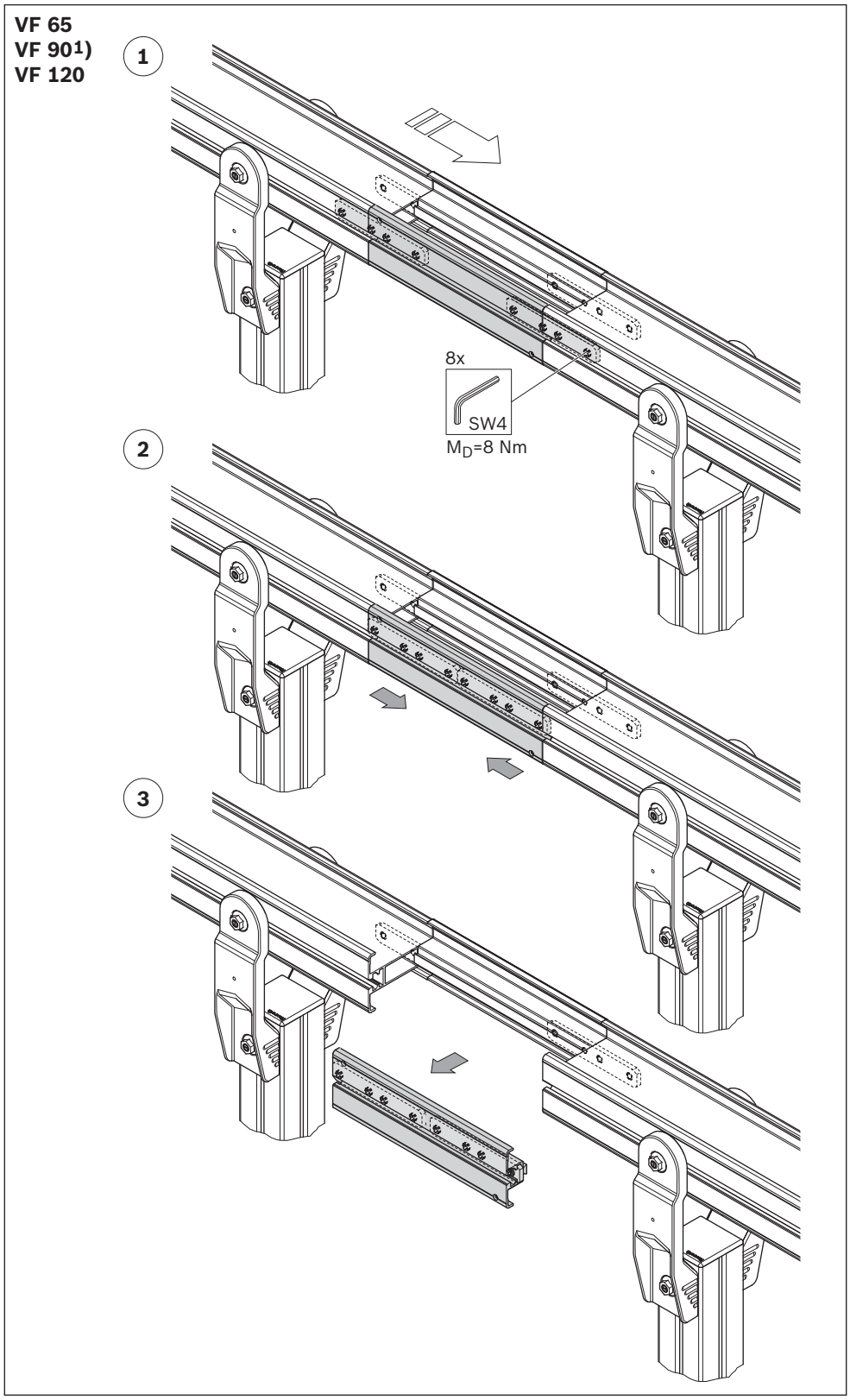

Fig. 21: AL system, opening/closing the assembly module

Required accessories:
• Return unit (V)

V, VF 65:	**3842 547 516**
V, VF 90:	**3842 547 517**
V, VF 120:	**3842 547 518**
V, VF 160:	**3842 547 519**
V, VF 240:	**3842 547 520**
V, VF 320:	**3842 547 521**

Please note:
Make sure that the leg sets and the VarioFlow *plus* modules cannot topple over during installation until you screw the system to the floor.

[1]) Size shown
[2]) Drilled hole for fixing the slide rail, see page 75 and following.
[3]) Use the drilling jig **3842 553 518**

Return unit

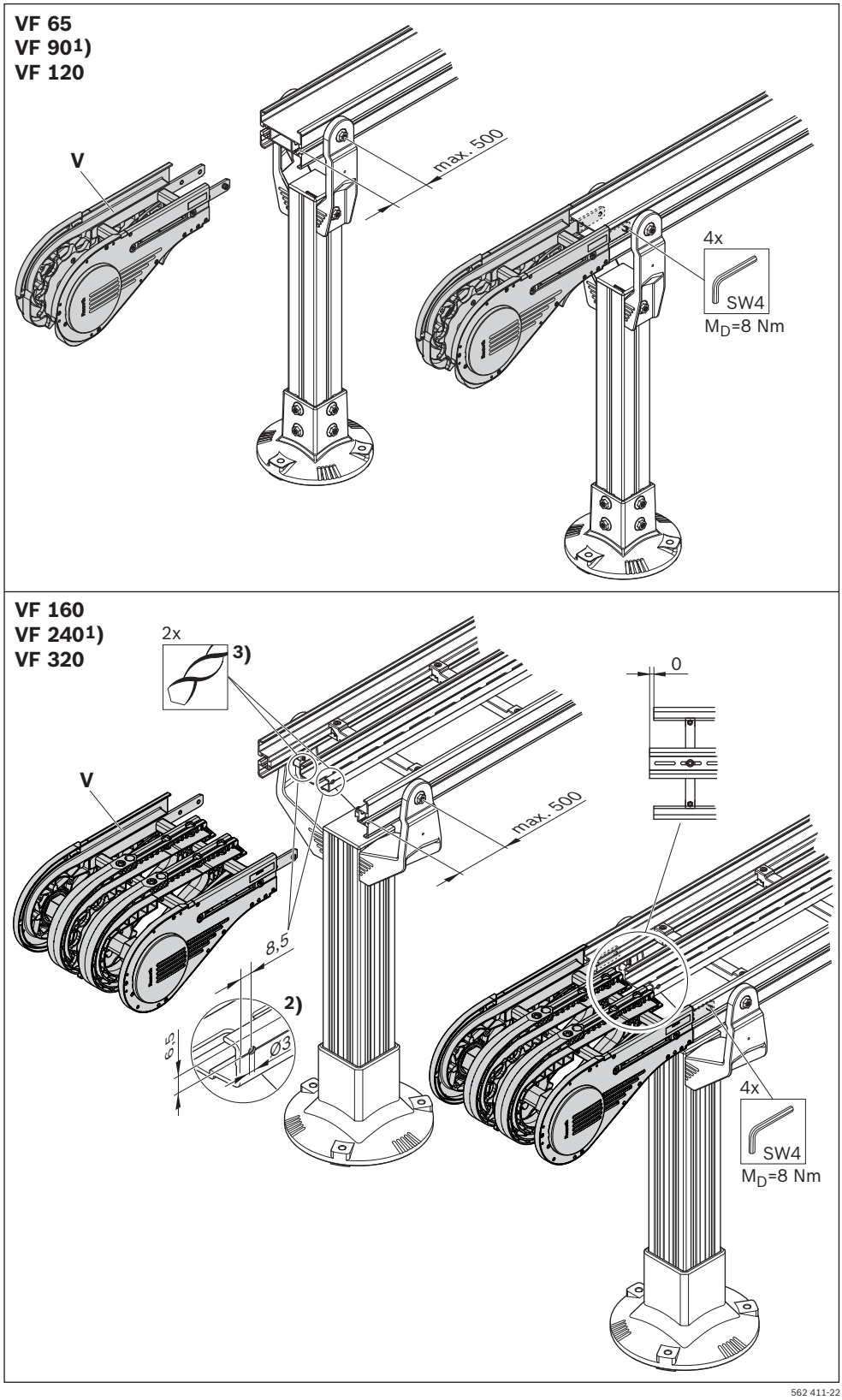

Fig. 22: AL system, installing return unit

ENGLISH

Required accessories:
- Basic unit (W), guard plates (z), not installed.
- Holder (X)
- Chain sprocket (Y)

W, VF 65:	**3842 546 120**
W, VF 90:	**3842 546 121**
W, VF 120:	**3842 546 122**
X, VF 65:	**3842 547 442**
X, VF 90:	**3842 547 443**
X, VF 120:	**3842 547 444**
Y, VF 65:	**3842 553 047**
Y, VF 90:	**3842 553 048**
Y, VF 120:	**3842 553 049**

Please note:
- You can also install the guard plates (z) later, after closing the conveyor chain.
- Make sure that the leg sets and the VarioFlow *plus* modules cannot topple over during installation until you screw the system to the floor.
- The chain sprocket is required for ascending and descending sections or to prevent the chain bag from swinging out

▶ Further assembly steps:
- Slide rail installation, see page 75.
- Gear motor installation, see pages 161, 162.

[1]) Size shown

[2]) The Machinery Directive 2006/42/EC requirement for captive screws on protective covers is fulfilled if this locking washer (z) is fitted.

Basic unit

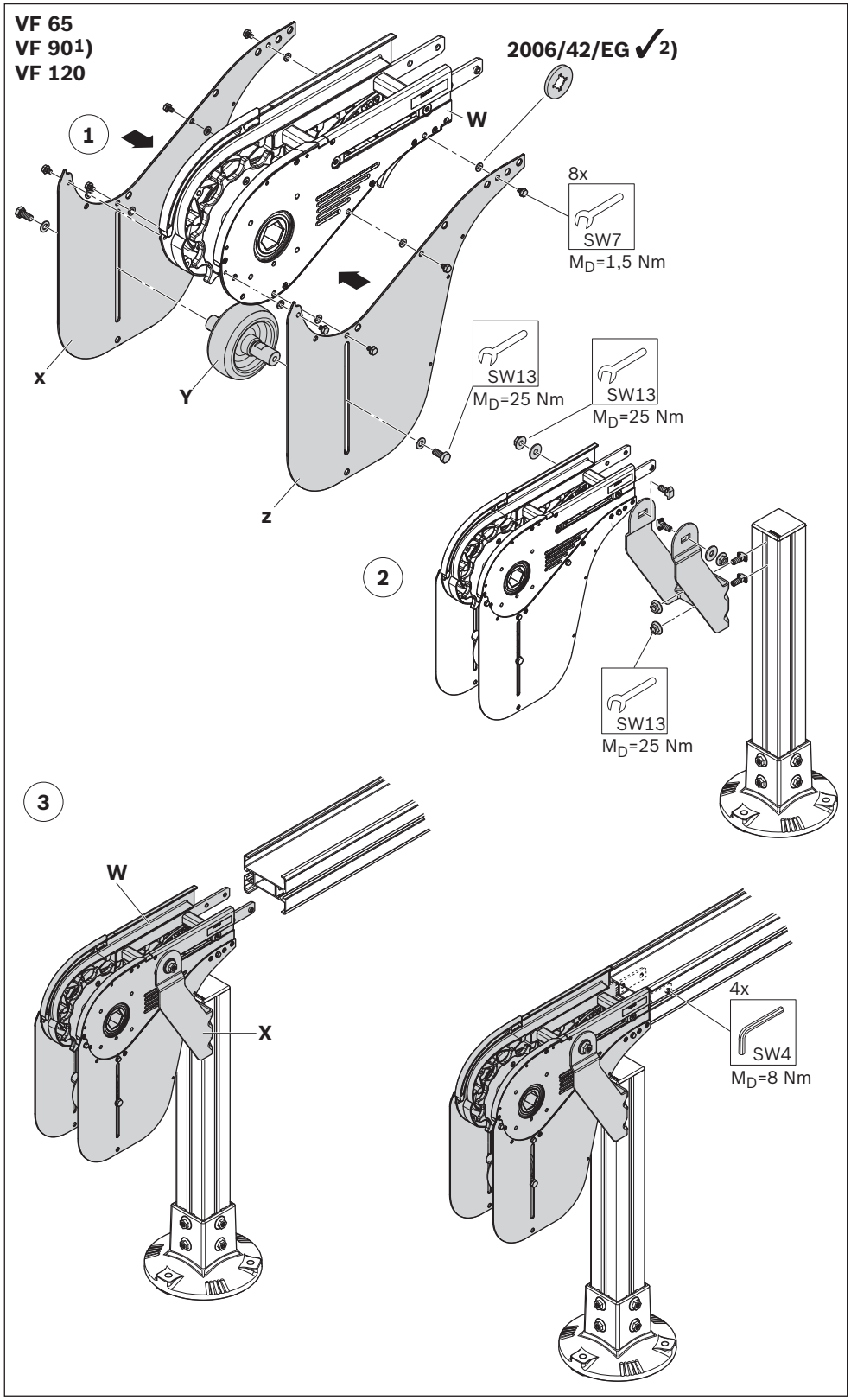

562 411-23

Fig. 23: AL system, installing basic unit, VF 65 / VF 90 / VF 120

Required accessories:
- Basic unit (W) with unassembled guard plates (z).
- Holder (X)
- Chain sprocket (Y)

W, VF 160:	**3842 546 123**
W, VF 240:	**3842 546 124**
W, VF 320:	**3842 546 125**
X, VF 160:	**3842 547 445**
X, VF 240:	**3842 547 446**
X, VF 320:	**3842 547 447**
Y, VF 160:	**3842 553 057**
Y, VF 240:	**3842 553 058**
Y, VF 320:	**3842 553 059**

Please note:
- You can also install the guard plates (z) later, after closing the conveyor chain.
- Make sure that the leg sets and the VarioFlow *plus* modules cannot topple over during installation until you screw the system to the floor.
- The chain sprocket is required for ascending and descending sections or to prevent the chain bag from swinging out

▶ Further assembly steps:
- Slide rail installation, see page 75.
- Gear motor installation, see pages 161, 162.

[1]) Size shown

[2]) The Machinery Directive 2006/42 / EC requirement for captive screws on protective covers is fulfilled if this locking washer (z) is fitted.

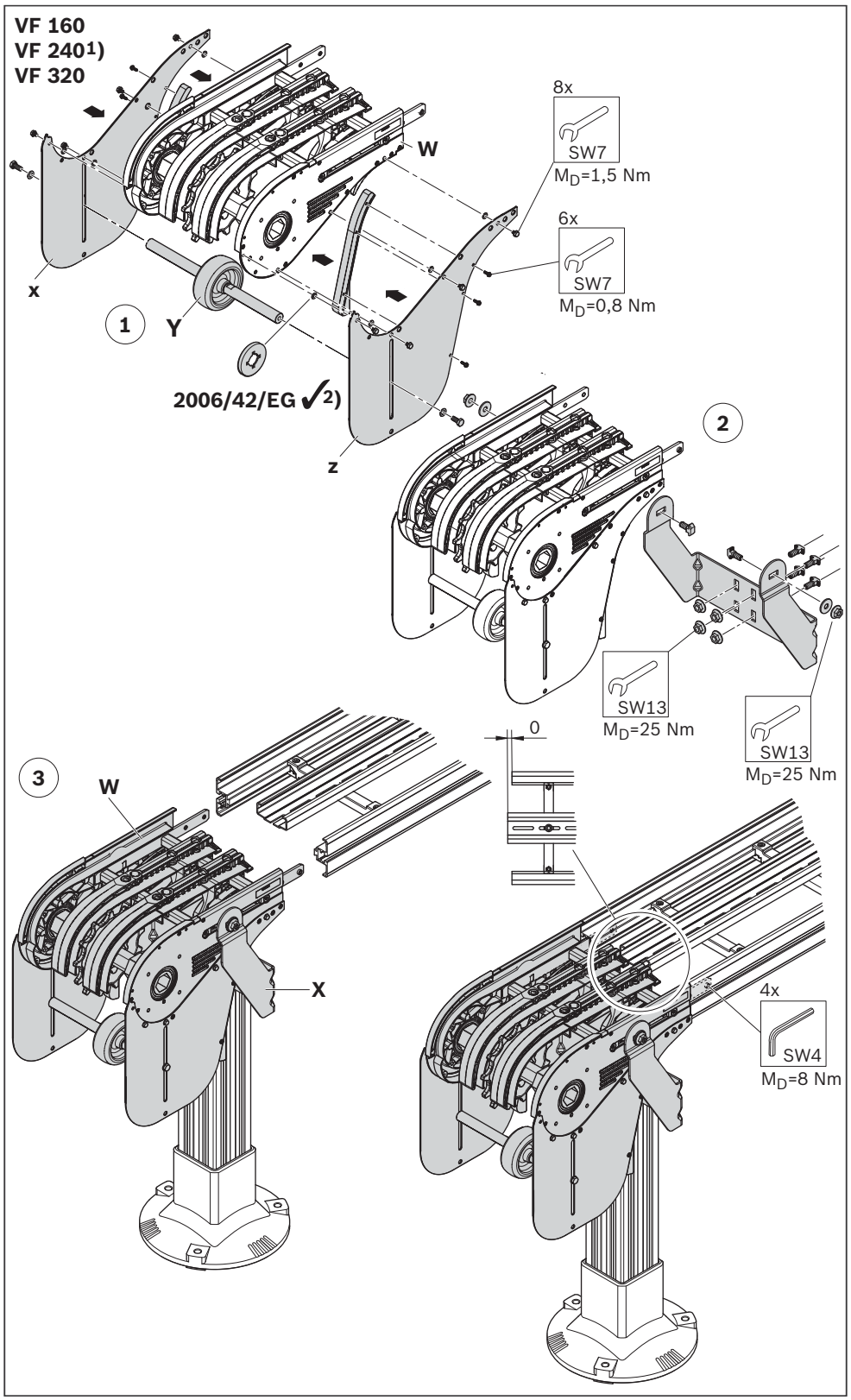

Fig. 24: AL system, installing basic unit, VF 160 / VF 240 / VF 320

ENGLISH

Required accessories:
- Connection drive (Z), ready-mounted with protective case (y)
- Connection kit,
  - passive
  - active

Z, VF 65:	**3842 547 712**
Z, VF 90:	**3842 547 713**

For connection kits, see **section 7.5.8 Connection kit**, page 93

Please note:
Make sure that the leg sets and the VarioFlow *plus* modules cannot topple over during installation until you screw the system to the floor.

[1]) Size shown

Drilled hole for fixing the slide rail, see page 75 and following. Use the drilling jig **3842 553 518**

Connection drive

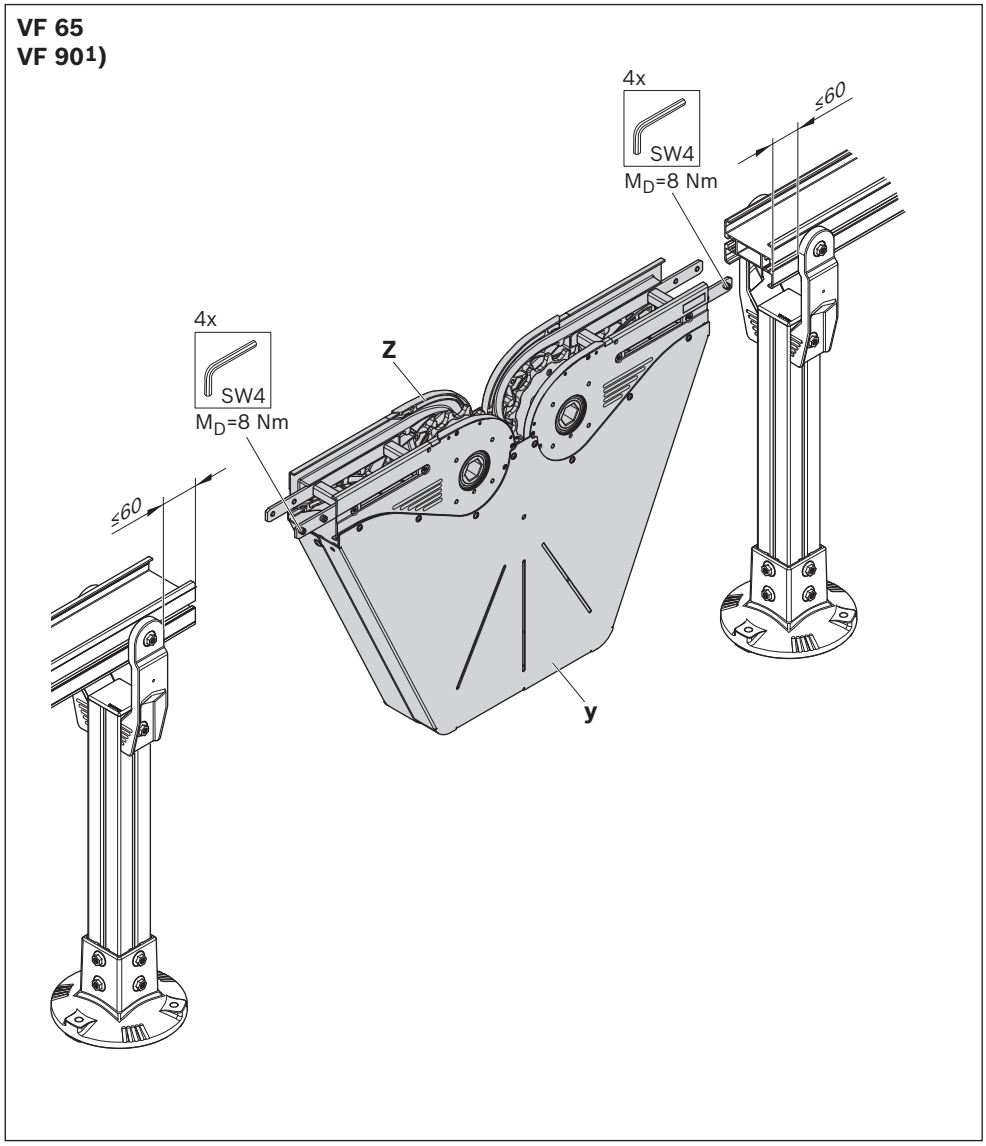

Fig. 25: AL system, installing connection drive

Required accessories:
- Center drive (ZA)

ZA, VF 65:	**3842 552 940**
ZA, VF 90:	**3842 552 941**
ZA, VF 120:	**3842 552 942**

Please note:
- Make sure that the leg sets and the VarioFlow *plus* modules cannot topple over during installation until you screw the system to the floor.
- A center drive and transmission drive combination is not possible.

[1]) Size shown

Center drive

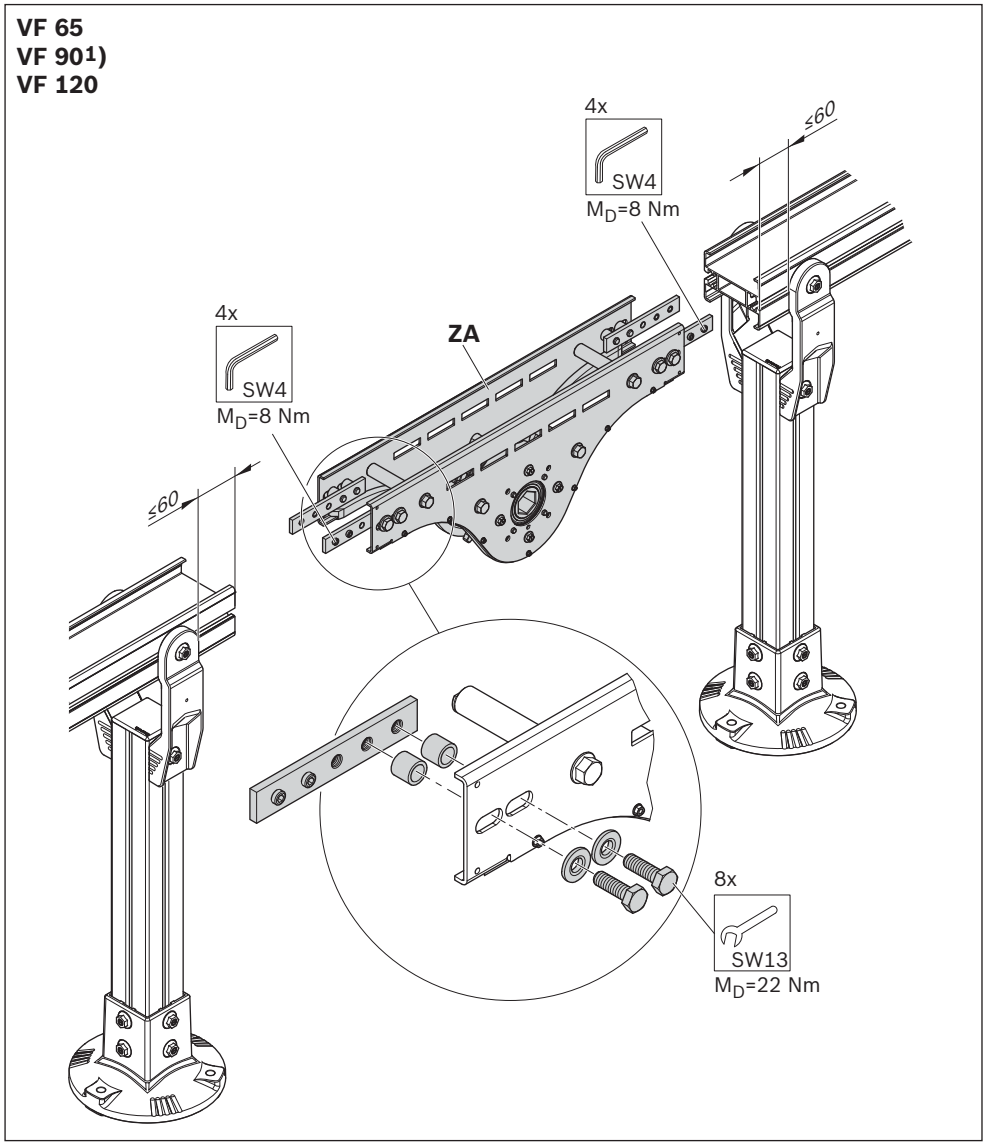

Fig. 26: AL system, installing center drive

ENGLISH

1.1.7 STS system

Leg sets

Required accessories:
- Foot (A)
- Tube (B)
- Flange (C)
- Holder (G), see page 42

A_1:	**3842 533 307**
A_2:	**3842 533 309**
B:	**3842 993 308/L**
C:	**3842 547 892**

▶ Install the supports.

Please note:
Make sure that the leg sets and the VarioFlow *plus* modules cannot topple over during installation until you screw the system to the floor.

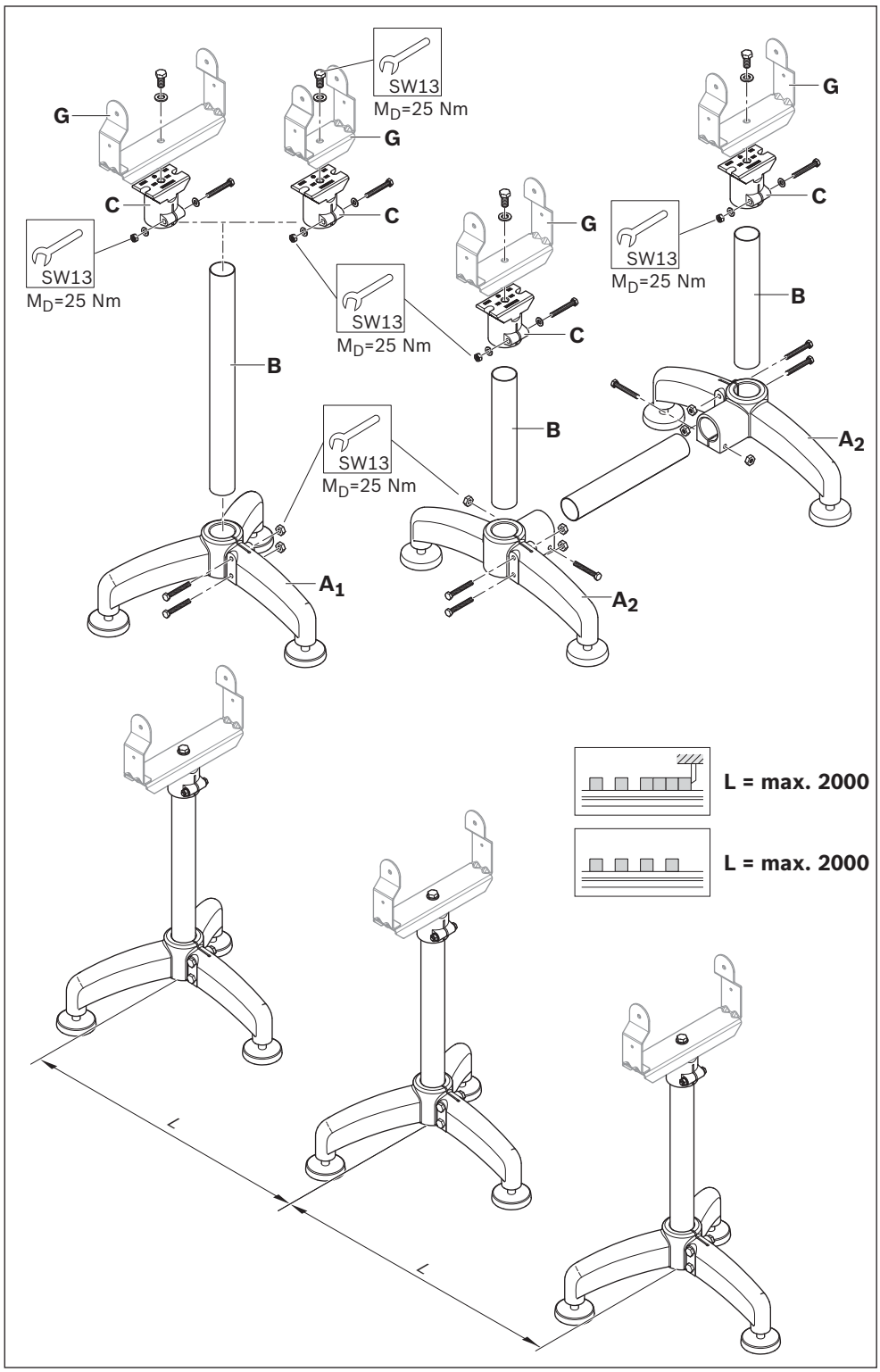

Fig. 27: STS system, installing leg sets

Required accessories:
- Section profile (D)
- Cross connector (E)
- Support profile (F, only for VF 160 / VF 240 / VF 320)

D,	
3024 mm:	**3842 546 649**
3024 mm:	**3842 547 905**
L mm:	**3842 996 027/L**
E, VF 65:	**3842 546 684**
E, VF 90:	**3842 546 685**
E, VF 120:	**3842 546 686**
E, VF 160:	**3842 546 687**
E, VF 240:	**3842 546 688**
E, VF 320:	**3842 546 689**

▶ Install the open-type section profiles.

Please note:
- Install the support profile last, after the curves, return unit and drive.
- The support profile (F) extends into the curves, see pages 46, 48.
- In order to fix the slide rail in place, drill holes must be made in the support profile, positions as shown on pages 46, 48, 56.

F,	
3024 mm:	**3842 546 700**
3024 mm:	**3842 547 906**
L mm:	**3842 996 029/L**

[1]) Size shown

Pre-assembling section profiles

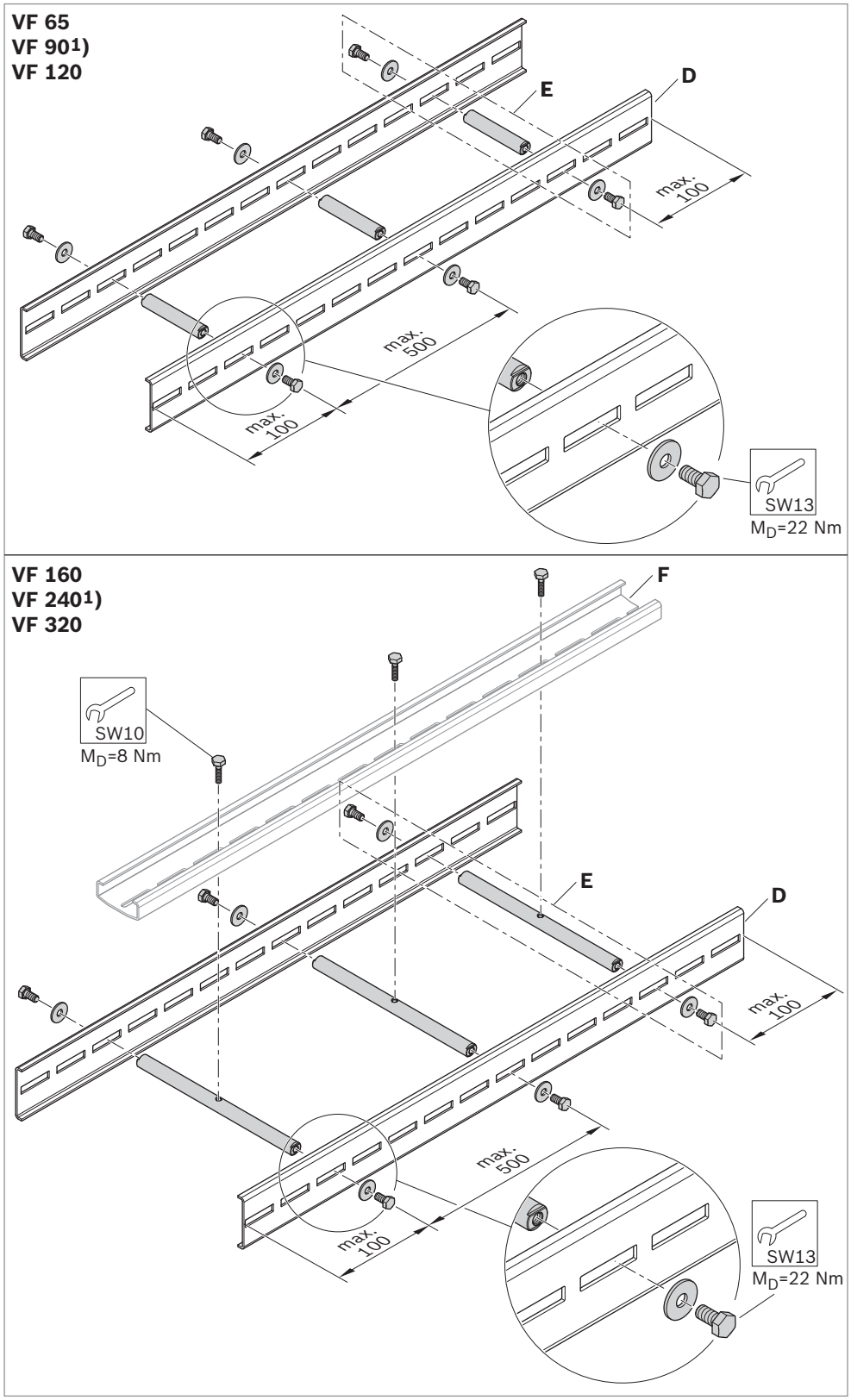

Fig. 28: STS system, pre-assembling section profiles

ENGLISH

Required accessories:
• Holder (G)

G, VF 65:	**3842 546 658**
G, VF 90:	**3842 546 659**
G, VF 120:	**3842 546 660**
G, VF 160:	**3842 546 661**
G, VF 240:	**3842 546 662**
G, VF 320:	**3842 546 663**

▶ Install the section profile on the supports.

Please note:
Make sure that the leg sets and the VarioFlow *plus* modules cannot topple over during installation until you screw the system to the floor.

[1]) Size shown

Section on leg sets

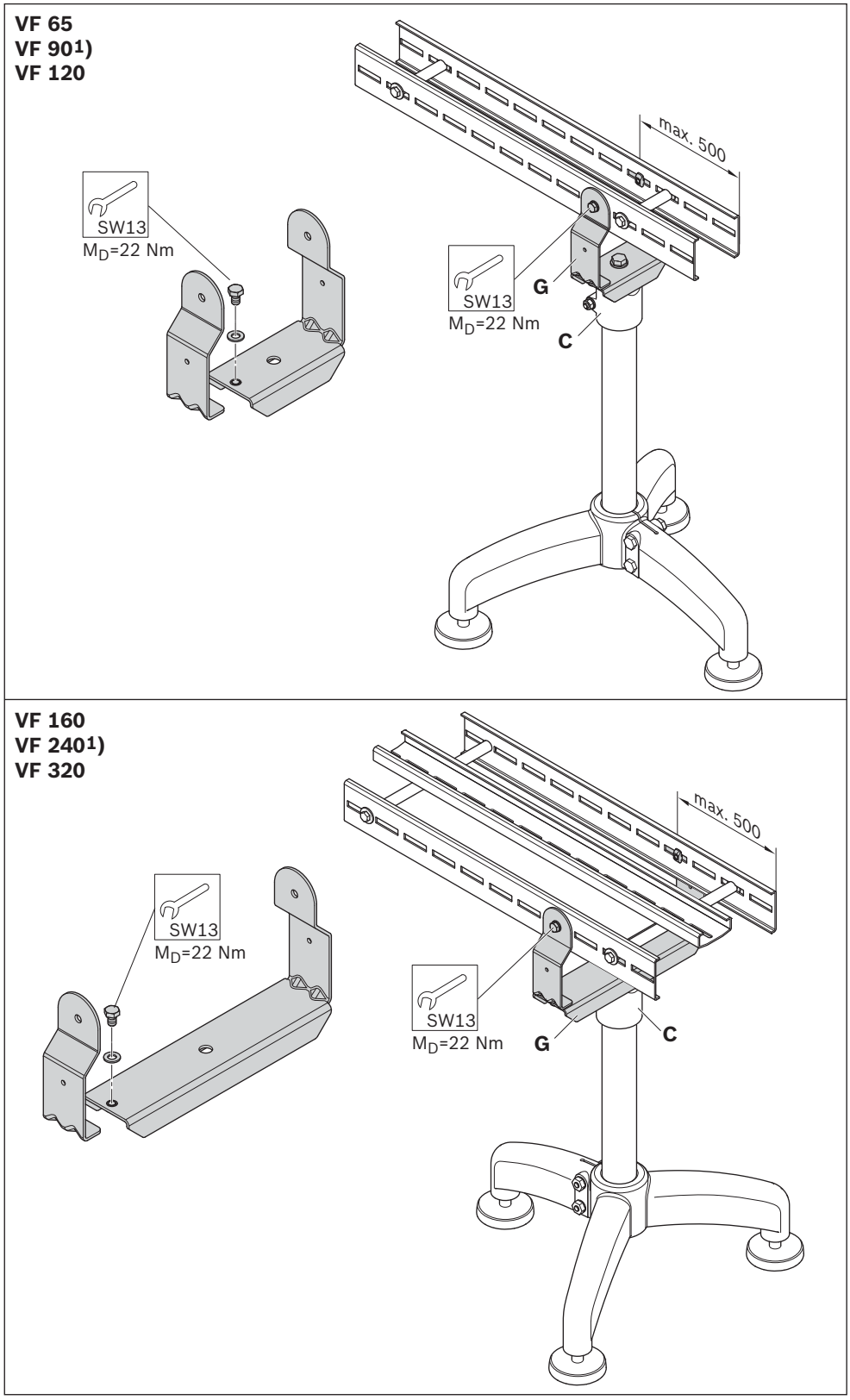

Fig. 29: STS system, installing section on leg sets

Required accessories:
• Profile connector (H)

H: **3842 547 895**

[1]) Size shown

Straight section

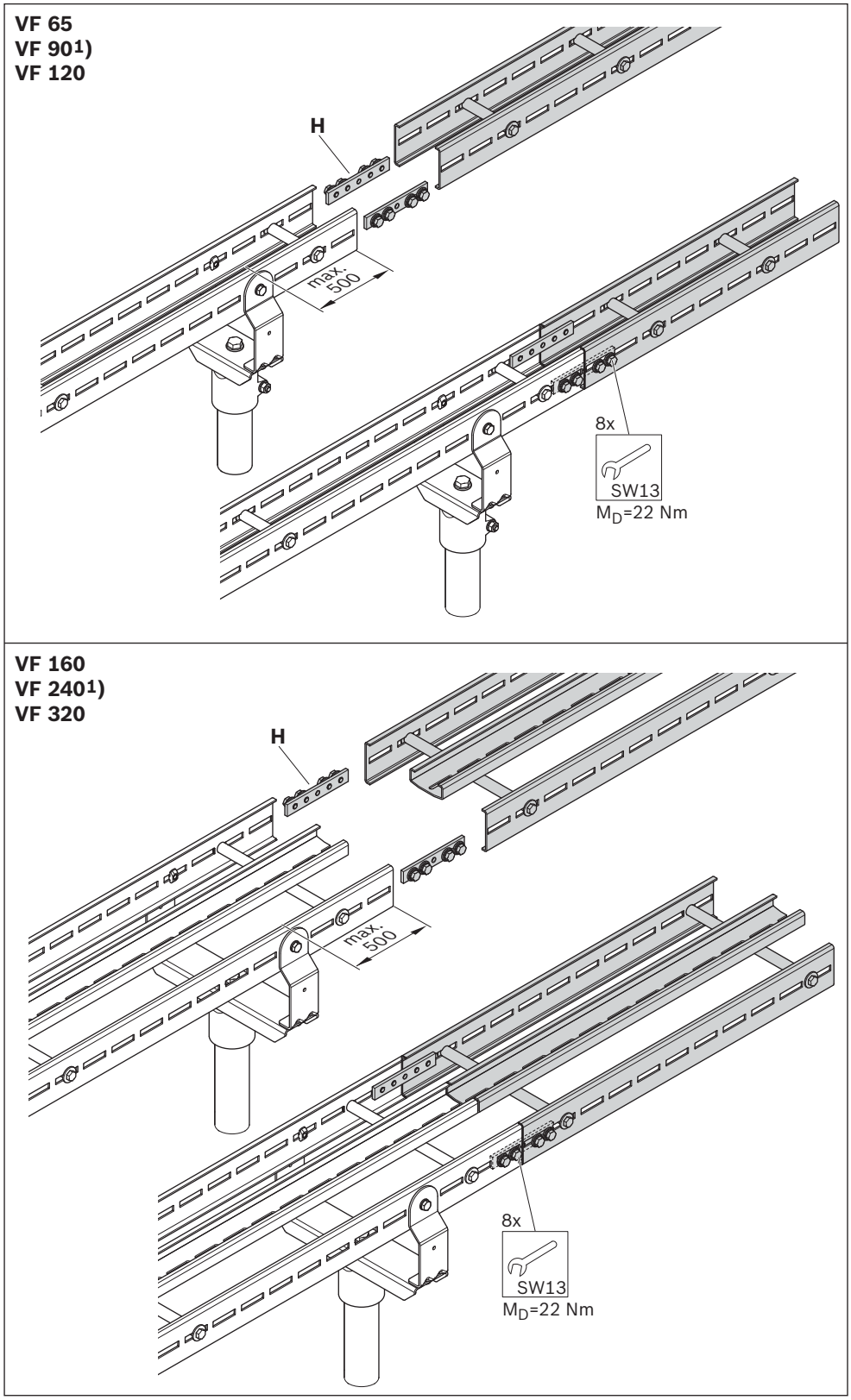

Fig. 30: STS system, installing straight section

ENGLISH

Required accessories:
- Curve wheel (J)

J, VF 65,

30°:	**3842 547 111**
45°:	**3842 547 112**
90°:	**3842 547 113**
180°:	**3842 547 114**

J, VF 90,

30°:	**3842 547 115**
45°:	**3842 547 116**
90°:	**3842 547 117**
180°:	**3842 547 118**

J, VF 120,

30°:	**3842 547 119**
45°:	**3842 547 120**
90°:	**3842 547 121**
180°:	**3842 547 122**

[1]) Size shown

[2]) Drilled hole for fixing the slide rail on the chain inlet (top side = conveying), see page 75 and following.

[3]) Drilled hole for fixing the slide rail on the chain inlet (bottom side = chain return), see page 75 and following.

[4]) Use the drilling jig **3842 553 518**

Curve wheel

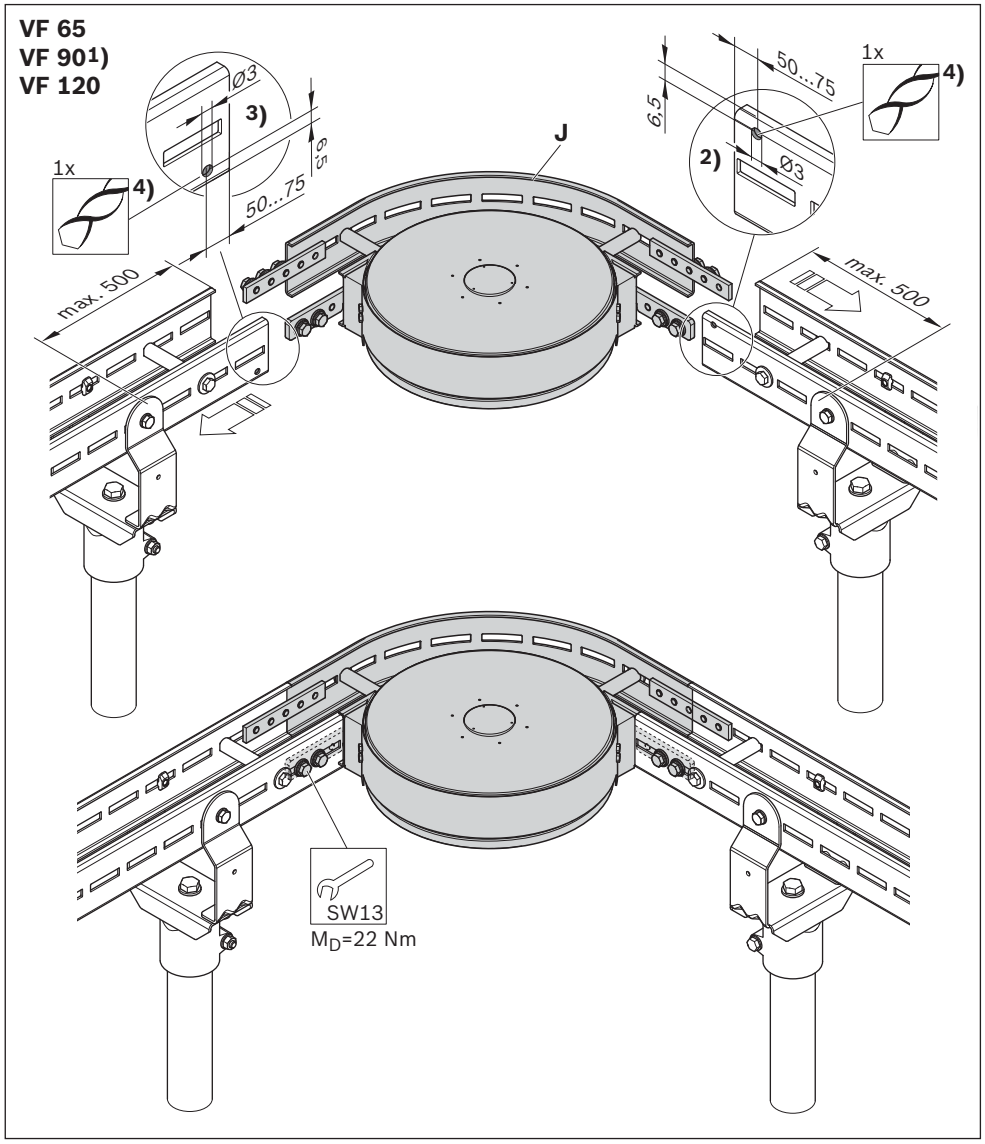

562 411-31

Fig. 31: STS system, installing curve wheel

Required accessories:
- Sliding curve horizontal (K)

K, VF 65,
30°, R700: **3842 557 051**
45°, R700: **3842 557 052**
90°, R700: **3842 557 053**

K, VF 90,
45°, R500: **3842 557 054**
90°, R500: **3842 557 055**
30°, R700: **3842 557 056**
45°, R700: **3842 557 057**
90°, R700: **3842 557 058**

K, VF 120,
30°, R700: **3842 557 059**
45°, R700: **3842 557 060**
90°, R700: **3842 557 061**

[1]) Size shown

Sliding curve horizontal

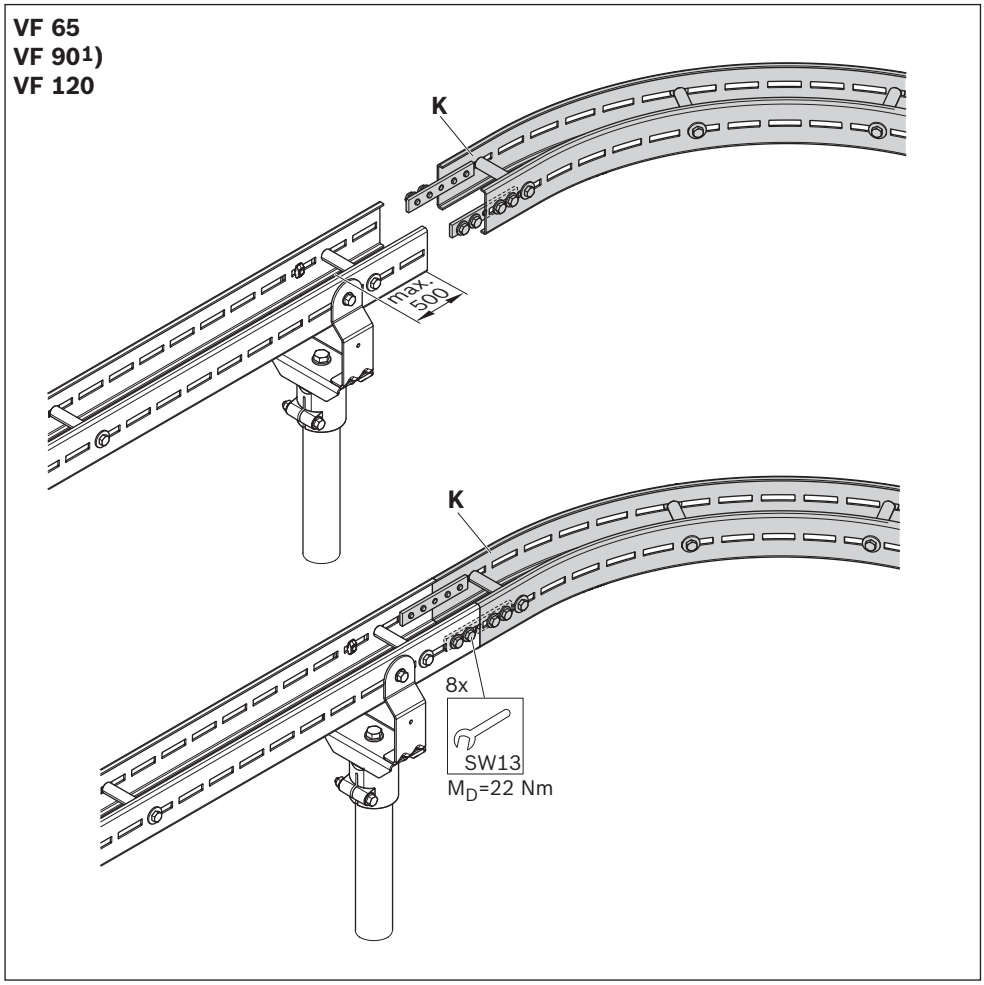

Fig. 32: AL system, installing horizontal sliding curve

Please note:
The friction which arises in sliding curves increases the required chain tensile force. Therefore, in the case of sliding curves, always use the Advanced or Premium slide rails for the entire system.

ENGLISH

Required accessories:
- Roller curve horizontal (L)

L, VF 160,
30°: **3842 547 123**
45°: **3842 547 124**
90°: **3842 547 125**
180°: **3842 547 126**

L, VF 240,
30°: **3842 547 127**
45°: **3842 547 128**
90°: **3842 547 129**
180°: **3842 547 130**

L, VF 320,
30°: **3842 547 131**
45°: **3842 547 132**
90°: **3842 547 133**
180°: **3842 547 134**

Please note:
The chain guide must not touch the roller, (see [3])). The roller must be able to move freely, the gap dimension is to be observed.

[1]) Size shown
[2]) Drilled hole for fixing the slide rail, see page 75 and following.
[4]) Use the drilling jig **3842 553 518**

Horizontal roller curve on a section

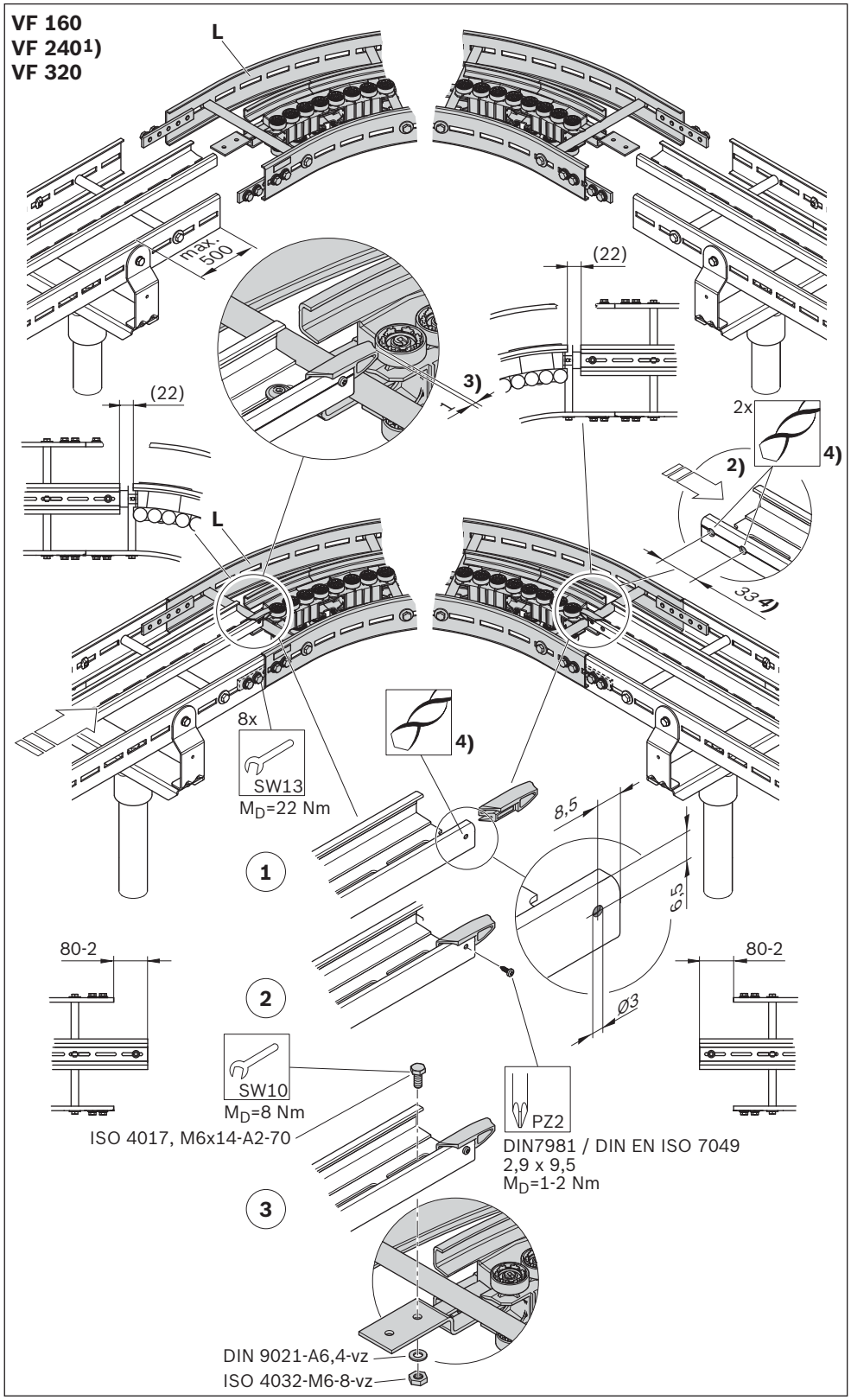

Fig. 33: STS system, installing horizontal roller curve on a section

Required accessories:
• Roller curve horizontal (L)

L, VF 160,
30°: **3842 547 123**
45°: **3842 547 124**
90°: **3842 547 125**
180°: **3842 547 126**

L, VF 240,
30°: **3842 547 127**
45°: **3842 547 128**
90°: **3842 547 129**
180°: **3842 547 130**

L, VF 320,
30°: **3842 547 131**
45°: **3842 547 132**
90°: **3842 547 133**
180°: **3842 547 134**

Please note:
The chain guide must not touch the roller, (see [3])). The roller must be able to move freely, the gap dimension is to be observed.

[1]) Size shown
[2]) Use the drilling jig **3842 553 518**

Drilled hole for fixing the slide rail, see page 75 and following.

Horizontal roller curve on a basic unit / return unit

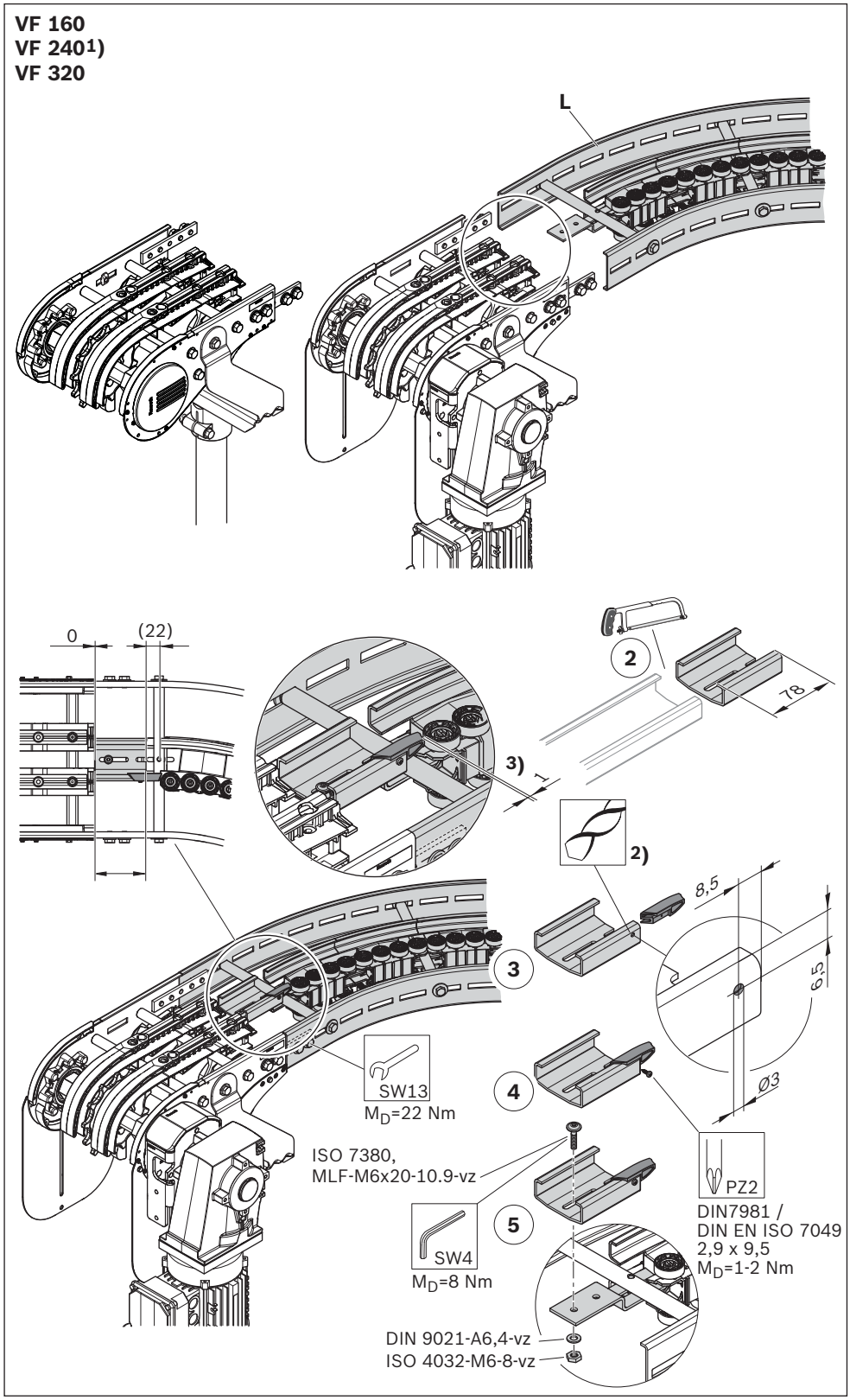

Fig. 34: STS system, installing horizontal roller curve on a basic unit / return unit

ENGLISH

Required accessories:
• Vertical curve STS (M)

M, VF 65,
5°, R500: **3842 547 135**
15°, R500: **3842 547 136**
30°, R500: **3842 547 137**
45°, R500: **3842 547 138**

M, VF 90,
5°, R500: **3842 547 139**
15°, R500: **3842 547 140**
30°, R500: **3842 547 141**
45°, R500: **3842 547 142**

M, VF 120,
5°, R500: **3842 547 143**
15°, R500: **3842 547 144**
30°, R500: **3842 547 145**
45°, R500: **3842 547 146**

Please note:
The friction which arises in vertical curves increases the required chain tensile force.
Therefore, in the case of vertical curves, always use the Advanced or Premium slide rails for the entire system. See slide rail installation, page 75 and following.

[1]) Size shown

Vertical curve STS, VF 65 / VF 90 / VF 120

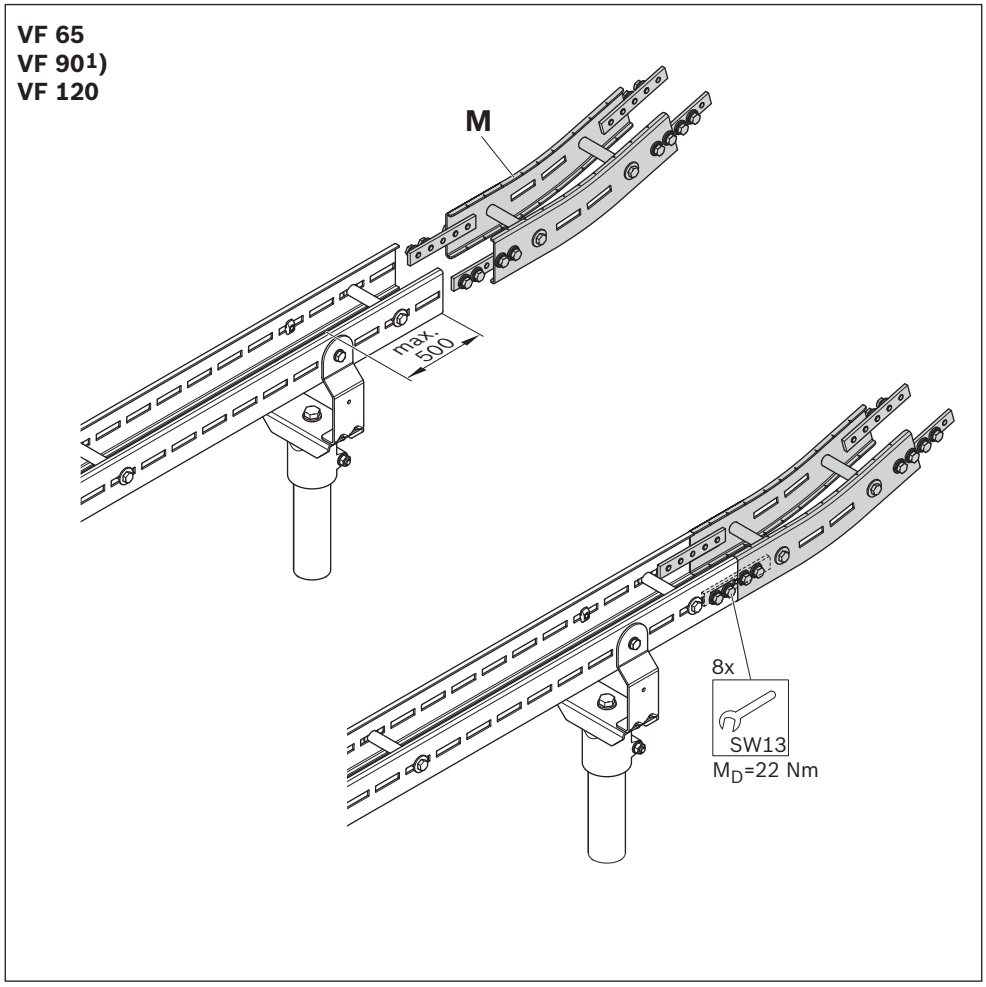

Fig. 35: STS system, installing vertical curve STS, VF 65 / VF 90 / VF 120

Required accessories:
- Vertical curve STS (M)
- Slide rail Advanced or Premium

3842 546 116

M, VF 160,
5°, R500: **3842 547 147**
15°, R500: **3842 547 148**
30°, R500: **3842 547 149**
45°, R500: **3842 547 150**

M, VF 240,
5°, R500: **3842 547 151**
15°, R500: **3842 547 152**
30°, R500: **3842 547 153**

M, VF 320,
5°, R500: **3842 547 154**
15°, R500: **3842 547 155**
30°, R500: **3842 547 156**

1. Install the chain guides.
2. Install the slide rail.

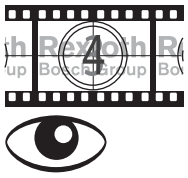

[1]) Size shown

[2]) Running direction of the return chain on the bottom side of the profile.

Vertical curve STS, VF 160 / VF 240 / VF 320

First install the slide rail and guides for the chain return [2]) on the bottom side of the curve.

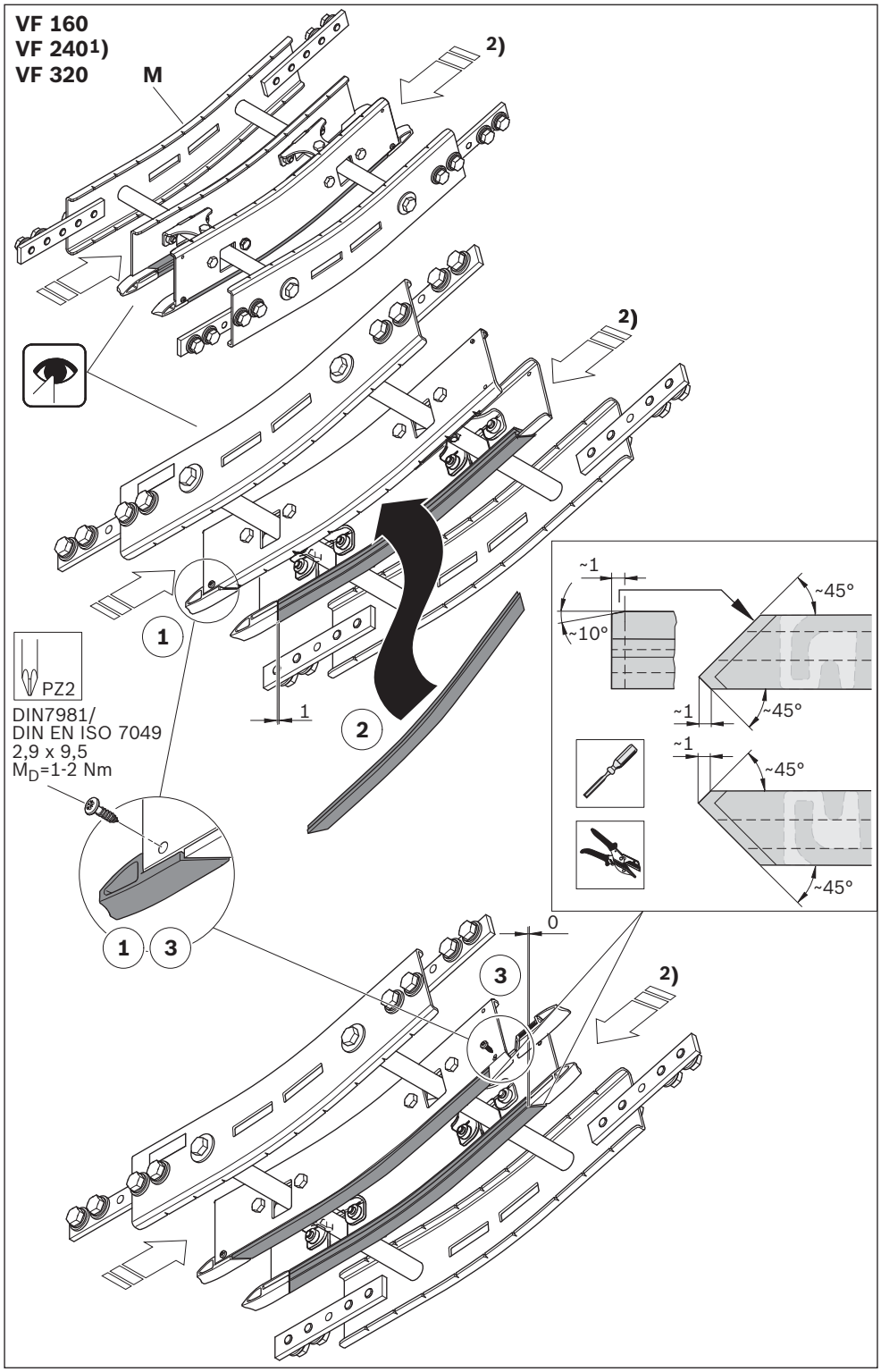

562 411-36

Fig. 36: STS system, vertical curve STS, upwards: installing slide rail for chain return

ENGLISH

1. Install the chain guides.
2. Install the slide rail.

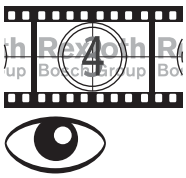

[1]) Size shown

[2]) Running direction of the return chain on the bottom side of the profile.

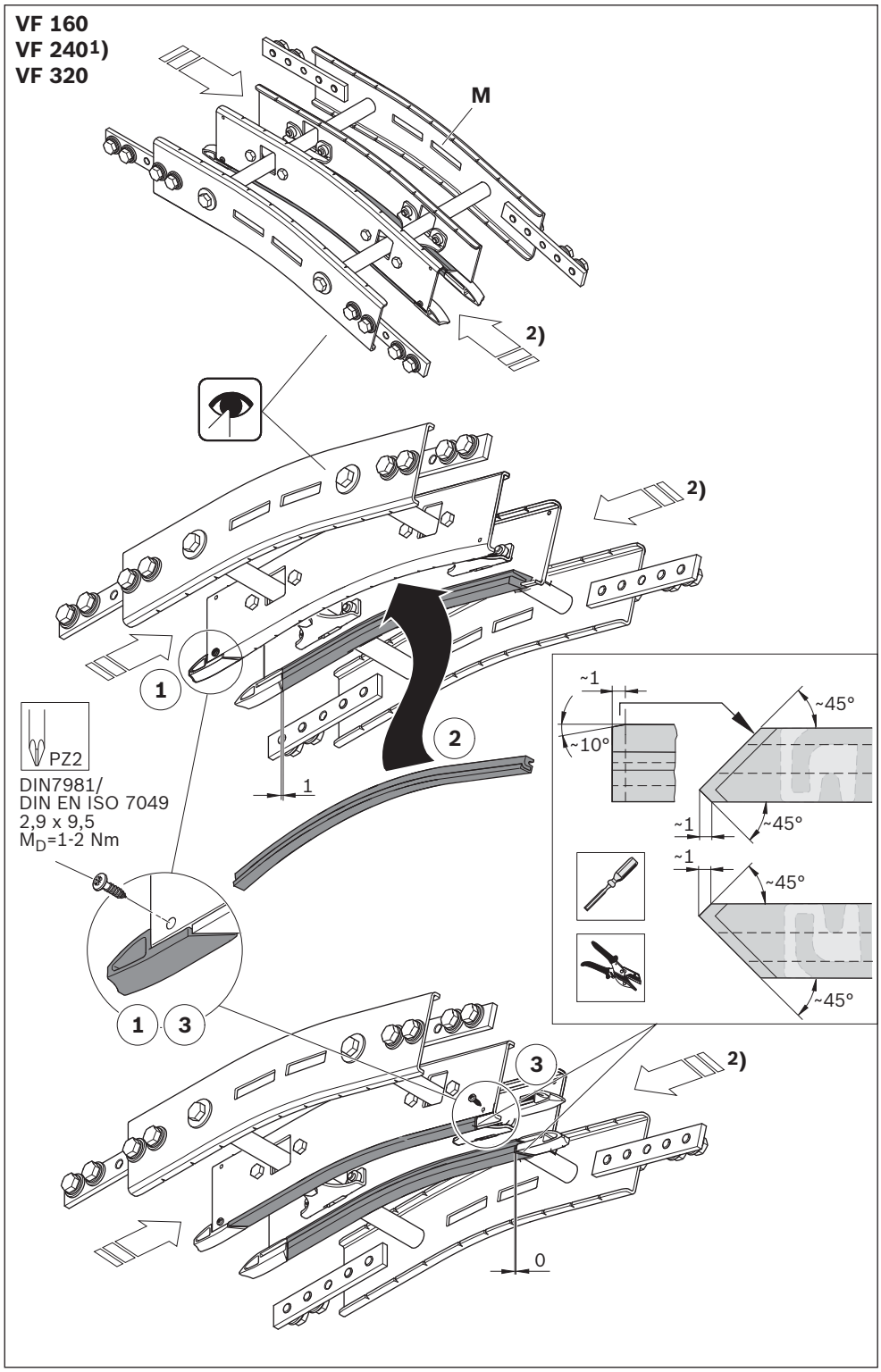

562 411-37

Fig. 37: STS system, vertical curve STS, downwards: installing slide rail for chain return

Please note:
The friction which arises in vertical curves increases the required chain tensile force.
Therefore, in the case of vertical curves, always use the Advanced or Premium slide rails for the entire system. See slide rail installation, page 75 and following.

[1]) Size shown

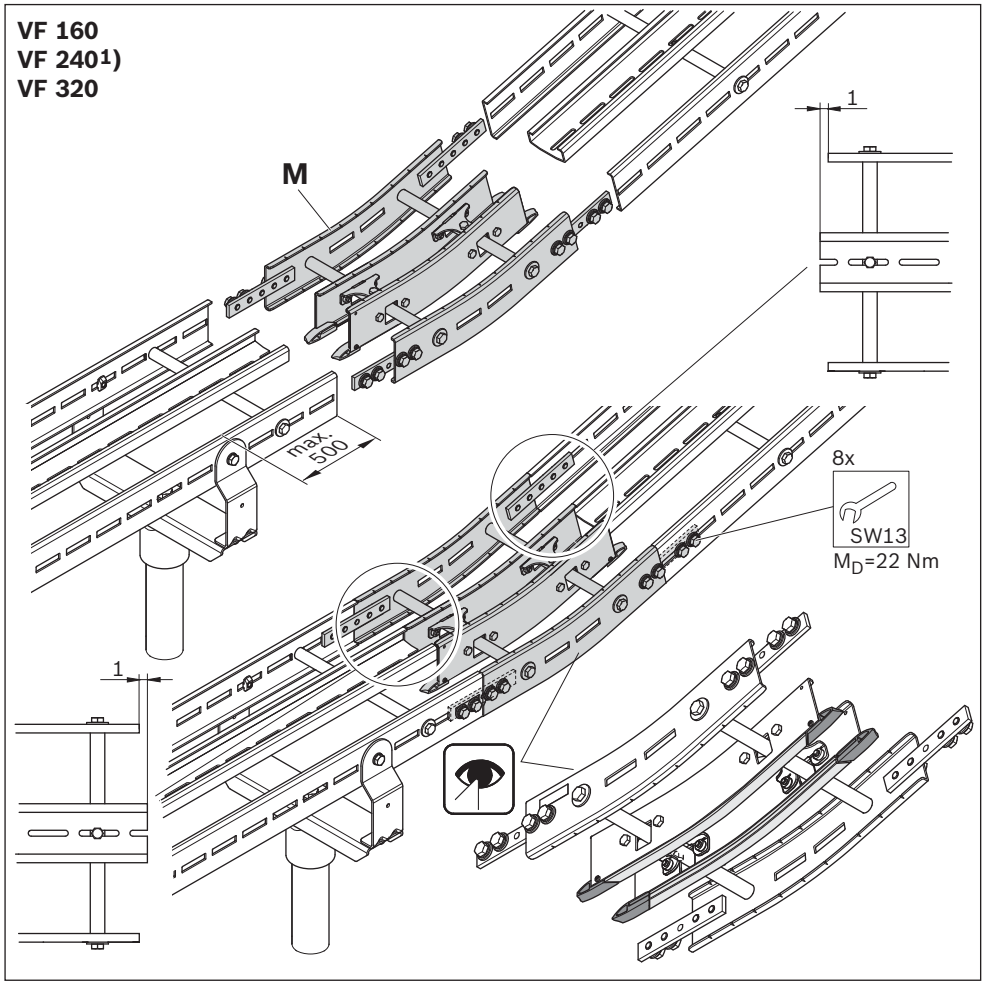

Fig. 38: STS system, installing vertical curve STS, VF 160 / VF 240 / VF 320

ENGLISH

Please note:
The friction which arises in vertical curves increases the required chain tensile force.
Therefore, in the case of vertical curves, always use the Advanced or Premium slide rails for the entire system. See slide rail installation, page 75 and following.

[1]) Size shown

Vertical curve STS on a basic unit / return unit

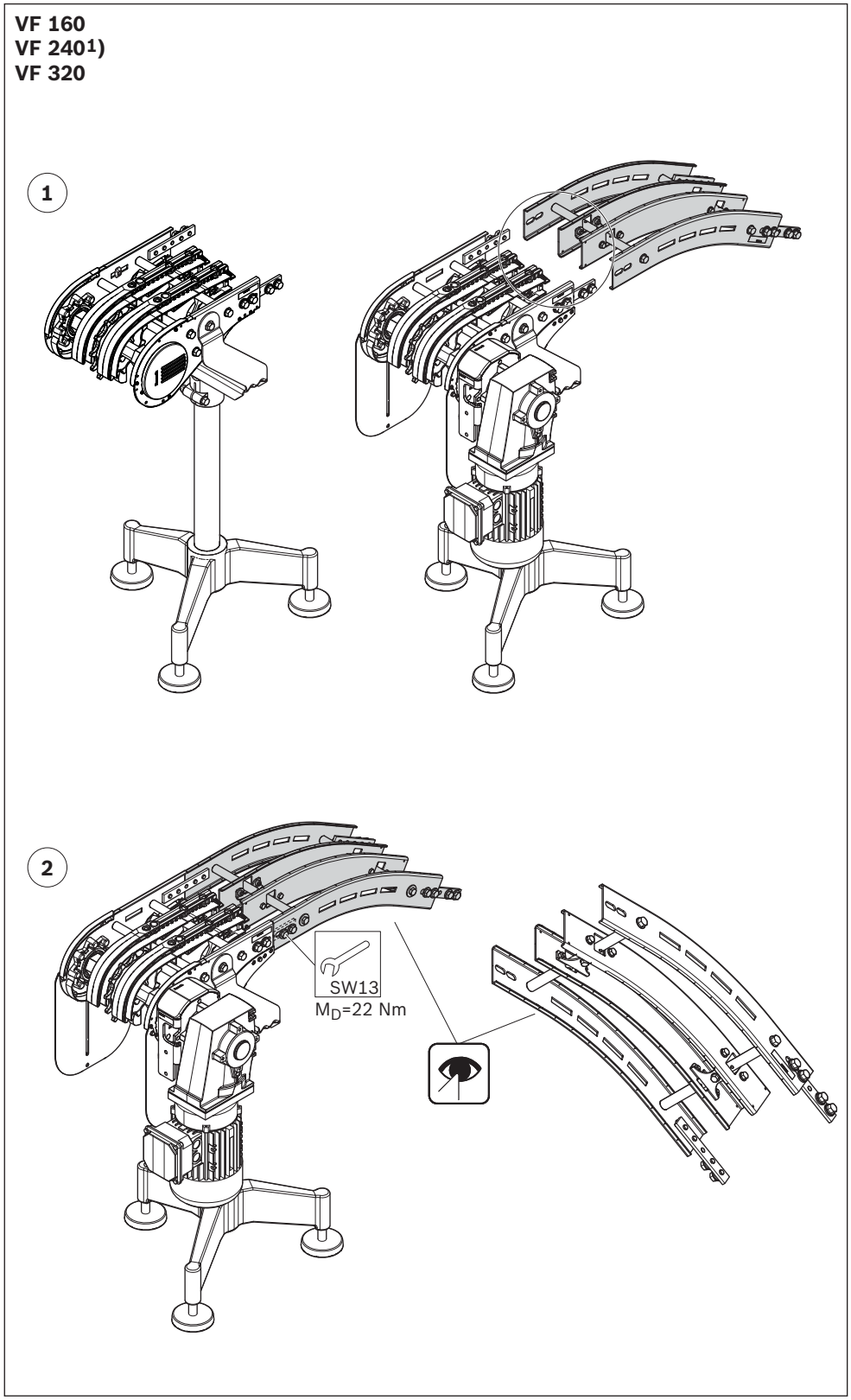

Fig. 39: STS system, installing vertical curve STS on a basic unit / return unit

Required accessories
- Assembly module (N)

N: 3842 547 900

Please note:
- Install the assembly module where it can be easily accessed during subsequent operation. This facilitates the installation, inspection, and replacement of the conveyor chain.
- The drilled holes for fixing the slide rail in position (see [2])) must be towards the front in the conveying direction.
- Slide rail interruption is only required on the side to be opened.
- For sizes 160-320: Do not interrupt the support profile with slide rail to increase smooth running.

[1]) Size shown

[2]) Drilled hole for fixing the slide rail, see page 75 and following. Use the drilling jig **3842 553 518**

Assembly module

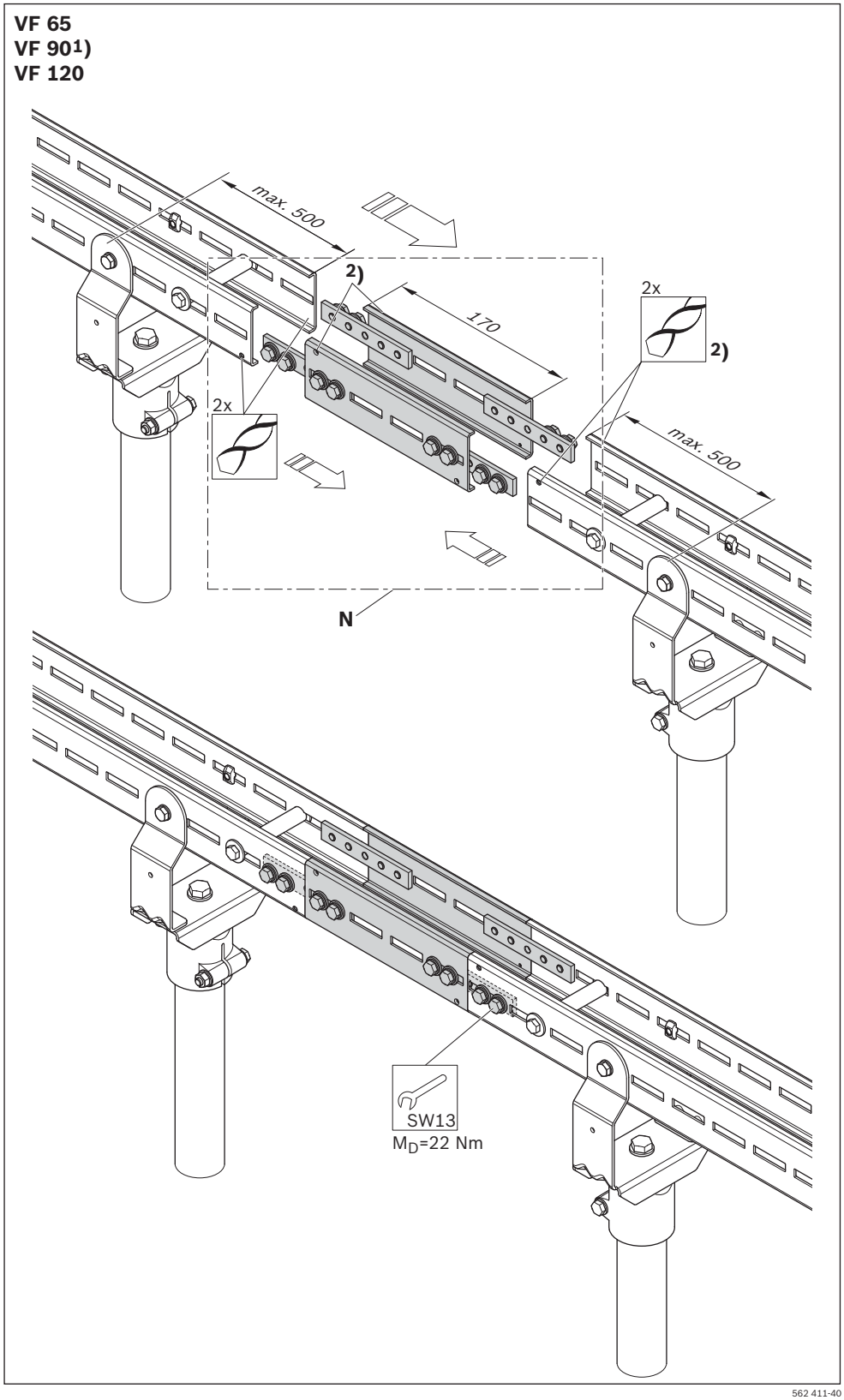

Fig. 40: STS system, installing assembly module

ENGLISH

Opening/closing the assembly module

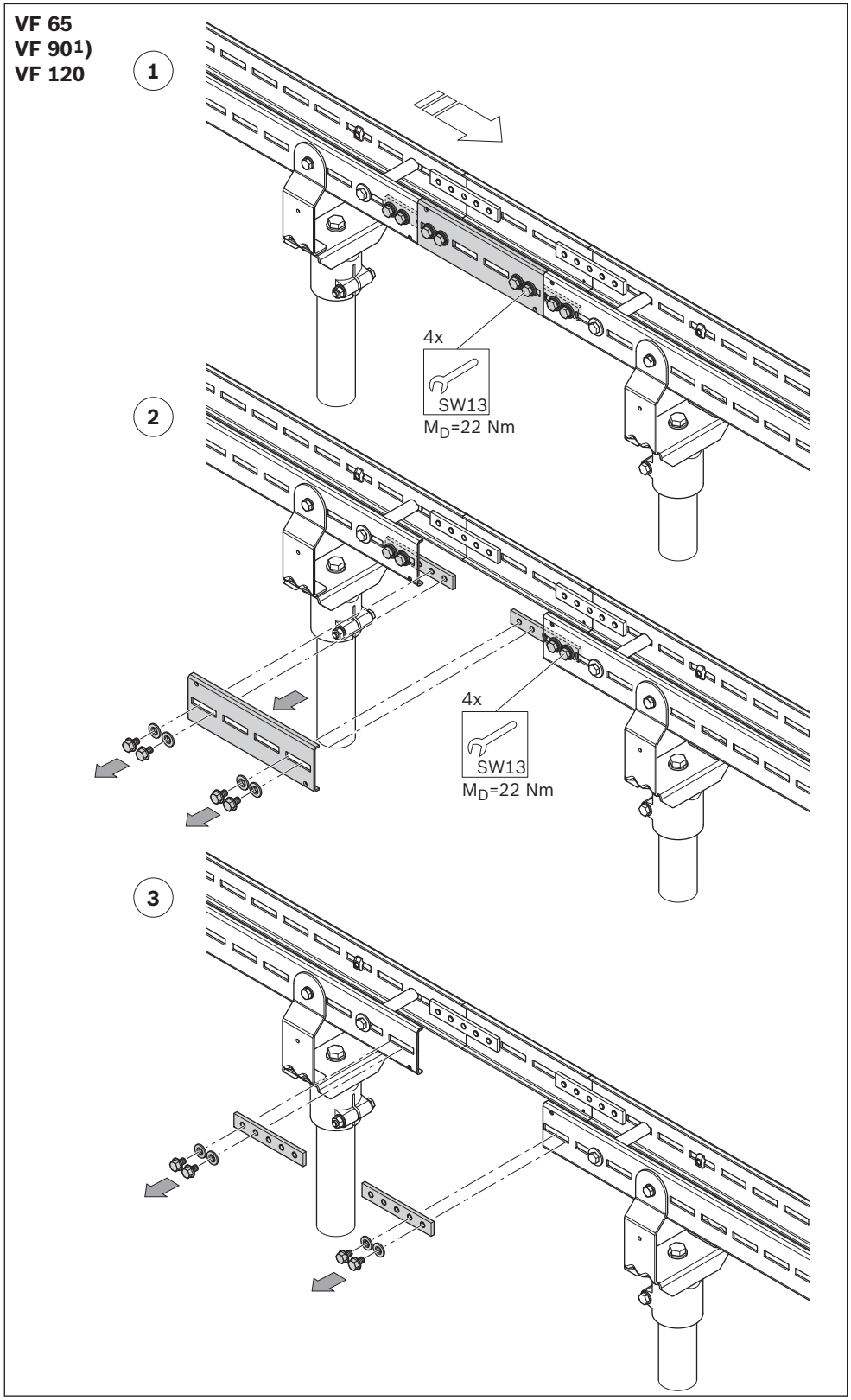

Fig. 41: STS system, opening/closing the assembly module

Required accessories:
- Profile connector STS Clean Section (O)

O: 3842 552 927

▶ Install the profile connector.

Please note:
Make sure that the leg sets and the VarioFlow *plus* modules cannot topple over during installation until you screw the system to the floor.

Profile connector STS Clean Section

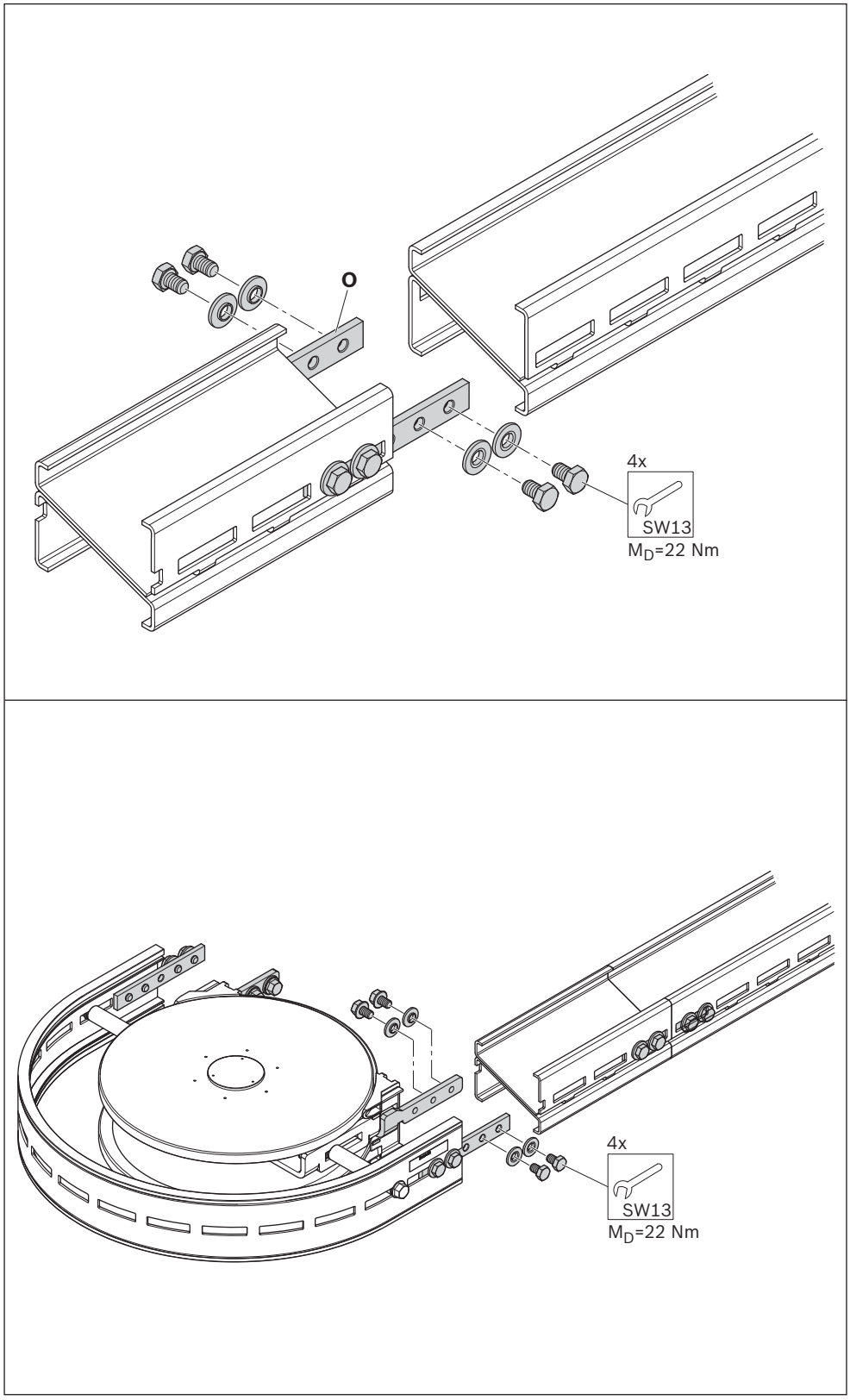

562 411-42

Fig. 42: STS system, overview

ENGLISH

Required accessories:
• Return unit (P)

P, VF 65:	**3842 547 528**
P, VF 90:	**3842 547 529**
P, VF 120:	**3842 547 530**
P, VF 160:	**3842 547 531**
P, VF 240:	**3842 547 532**
P, VF 320:	**3842 547 533**

Please note:
Make sure that the leg sets and the VarioFlow *plus* modules cannot topple over during installation until you screw the system to the floor.

[1]) Size shown
[2]) Drilled hole for fixing the slide rail, see page 75 and following.
[3]) Use the drilling jig **3842 553 518**

Return unit

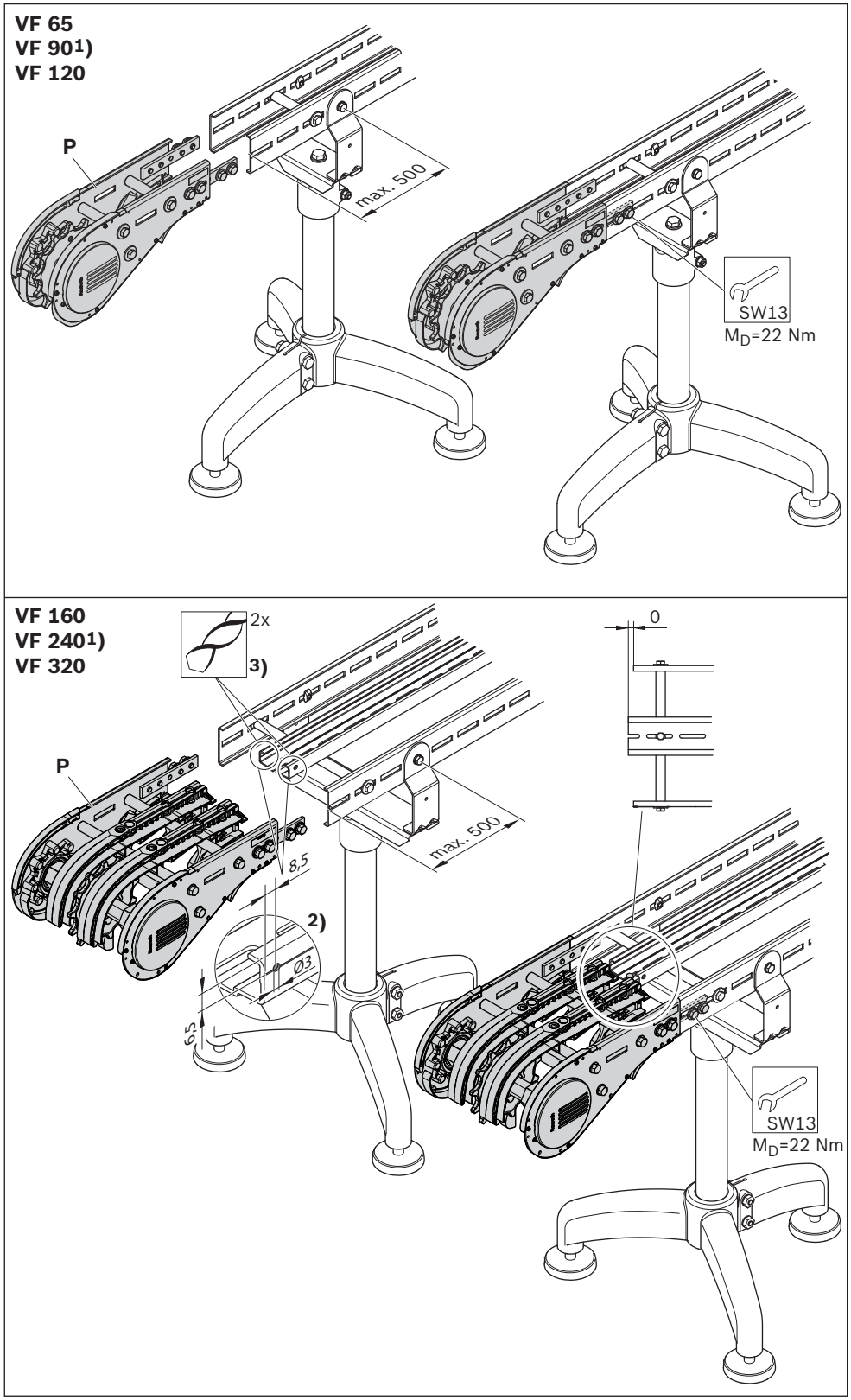

Fig. 43: STS system, installing return unit

Required accessories:
- Basic unit (Q), guard plates (x), not installed.
- Chain sprocket (R)
- Holder (S)

Q, VF 65:	**3842 547 522**
Q, VF 90:	**3842 547 523**
Q, VF 120:	**3842 547 524**
R, VF 65:	**3842 553 047**
R, VF 90:	**3842 553 048**
R, VF 120:	**3842 553 049**
S, VF 65:	**3842 559 114**
S, VF 90:	**3842 559 115**
S, VF 120:	**3842 559 116**

Please note:
- You can also install the guard plates (x) later, after closing the conveyor chain.
- Make sure that the leg sets and the VarioFlow *plus* modules cannot topple over during installation until you screw the system to the floor.
- The chain sprocket is required for ascending and descending sections or to prevent the chain bag from swinging out

▶ Further assembly steps:
- Slide rail installation, see page 75.
- Gear motor installation, see pages 161, 162.

[1]) Size shown

[2]) The Machinery Directive 2006/42/EC requirement for captive screws on protective covers is fulfilled if this locking washer (x) is fitted.

Basic unit

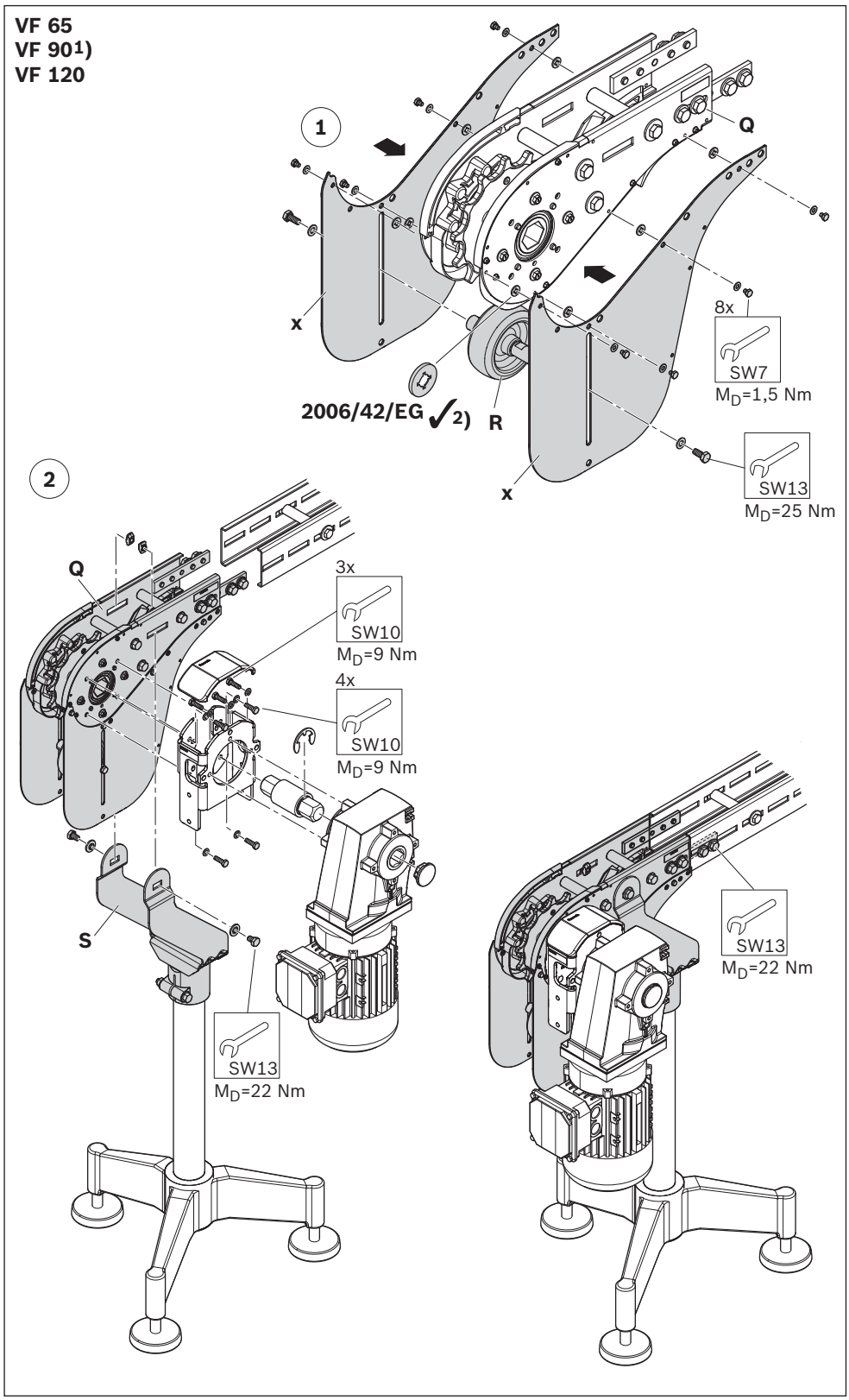

Fig. 44: STS system, installing basic unit, VF 65 / VF 90 / VF 120

ENGLISH

Required accessories:
- Basic unit (Q), guard plates (x), not installed.
- Chain sprocket (R)
- Holder (S)

Q, VF 160:	**3842 547 525**
Q, VF 240:	**3842 547 526**
Q, VF 320:	**3842 547 527**
R, VF 160:	**3842 553 057**
R, VF 240:	**3842 553 058**
R, VF 320:	**3842 553 059**
S, VF 160:	**3842 559 117**
S, VF 240:	**3842 559 118**
S, VF 320:	**3842 559 119**

Please note:
- You can also install the guard plates (x) later, after closing the conveyor chain.
- Make sure that the leg sets and the VarioFlow *plus* modules cannot topple over during installation until you screw the system to the floor.
- The chain sprocket is required for ascending and descending sections or to prevent the chain bag from swinging out.

▶ Further assembly steps:
- Slide rail installation, see page 75.
- Gear motor installation, see pages 161, 162.

[1]) Size shown

[2]) The Machinery Directive 2006/42/EC requirement for captive screws on protective covers is fulfilled if this locking washer (x) is fitted.

[3]) Use the drilling jig **3842 553 518**

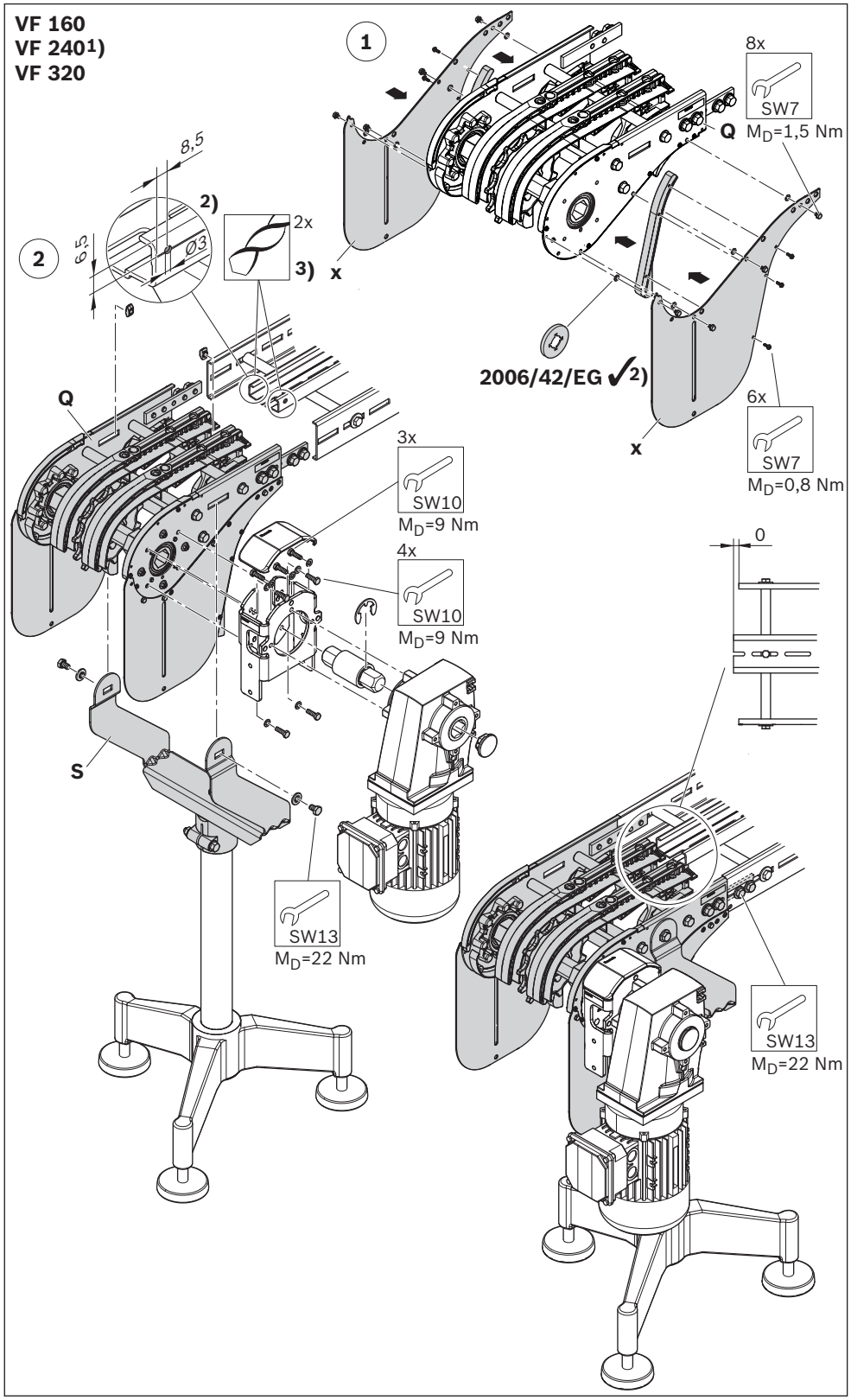

Fig. 45: STS system, installing basic unit, VF 160 / VF 240 / VF 320

Required accessories:
- Connection drive (T), ready-mounted with side plate (y)
- Connection kit,
  - passive
  - active

T, VF 65:	**3842 553 914**
T, VF 90:	**3842 553 915**

For connection kits, see section **7.5.8 Connection kit**, page 93

Please note:
Make sure that the leg sets and the VarioFlow *plus* modules cannot topple over during installation until you screw the system to the floor.

[1]) Size shown

Drilled hole for fixing the slide rail, see page 75 and following.

Connection drive

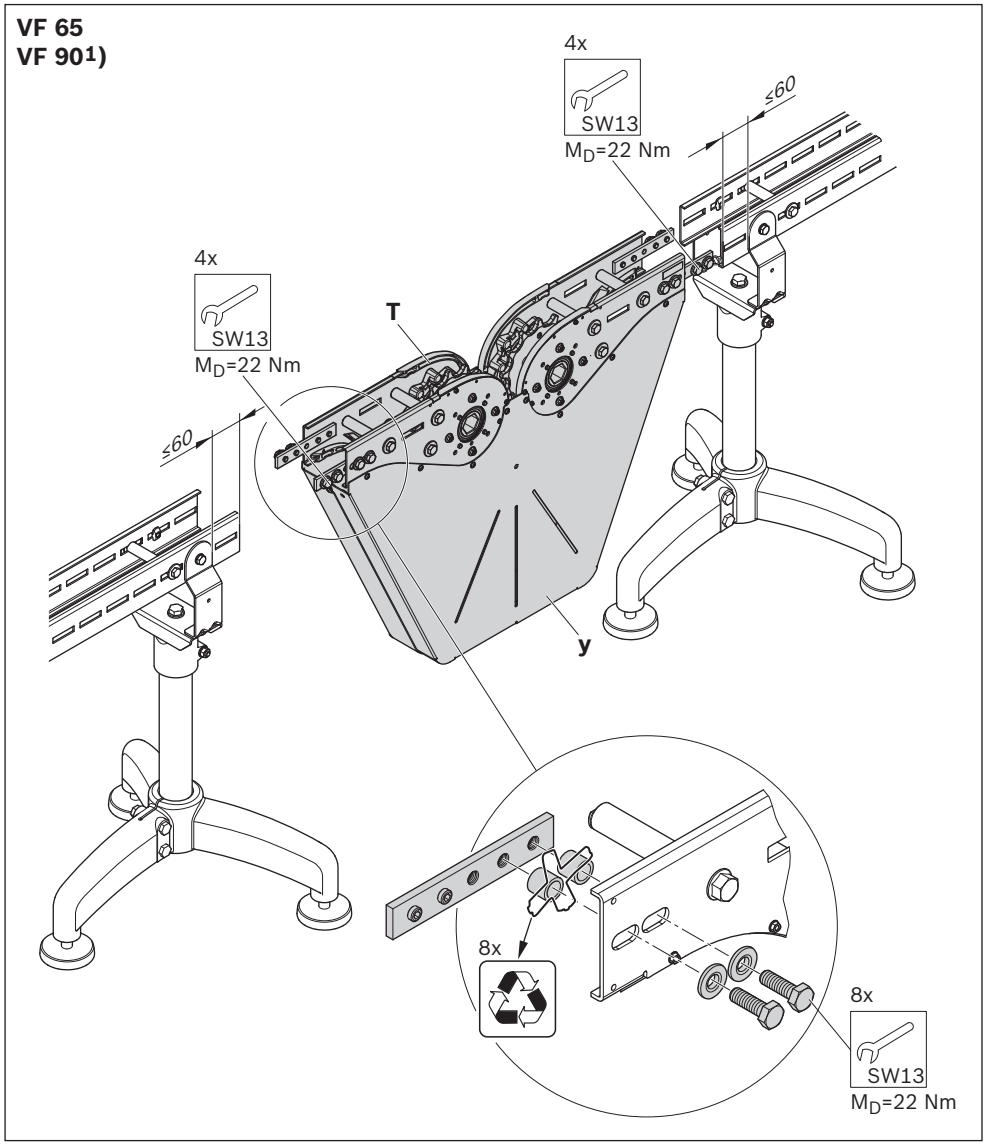

Fig. 46: STS system, installing connection drive

ENGLISH

Required accessories:
- Center drive (U)

U, VF 65:	**3842 552 940**
U, VF 90:	**3842 552 941**
U, VF 120:	**3842 552 942**

Please note:
- Make sure that the leg sets and the VarioFlow *plus* modules cannot topple over during installation until you screw the system to the floor.
- A center drive and transmission drive combination is not possible.

[1]) Size shown

Drilled hole for fixing the slide rail, see page 75 and following.

Center drive

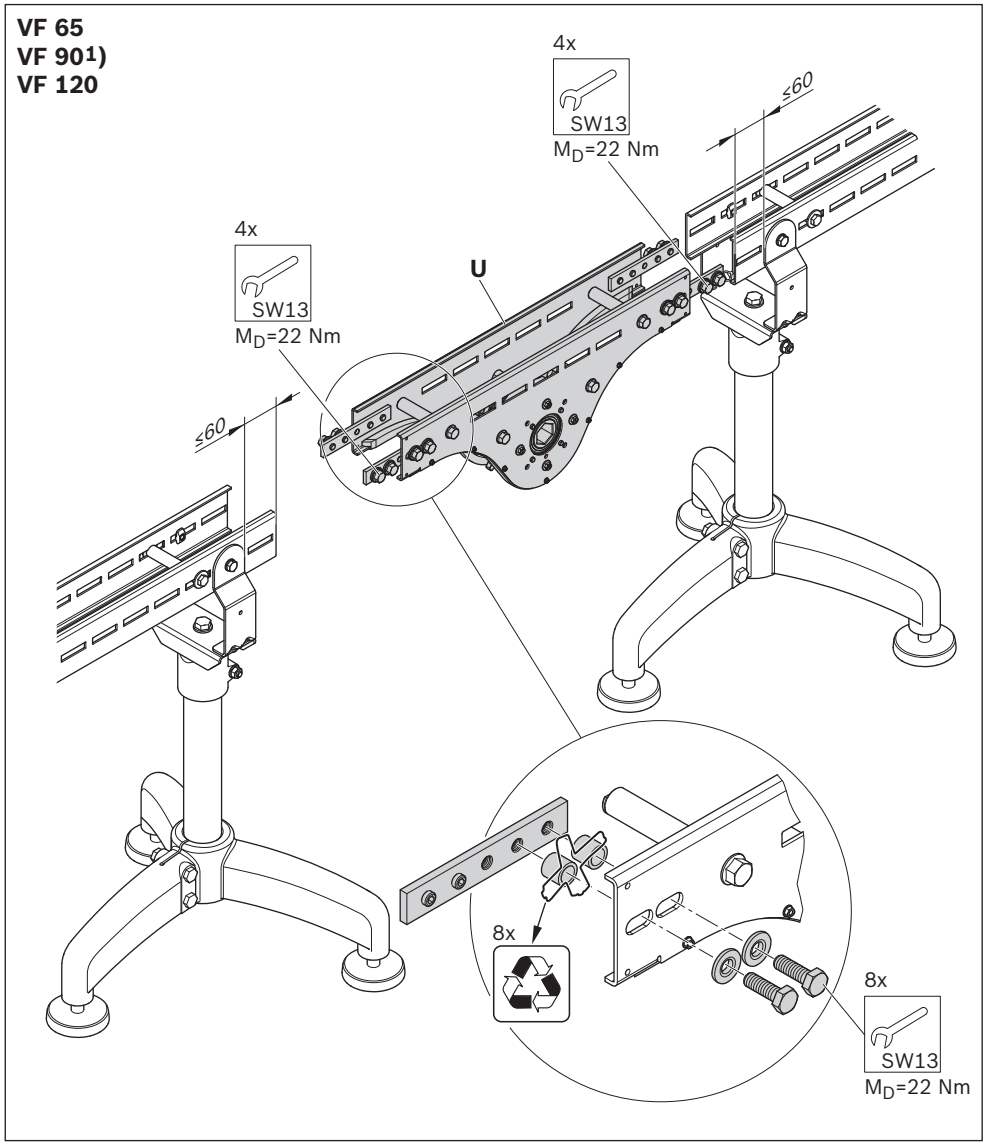

Fig. 47: STS system, installing center drive

1.1.8 ESD system

Overview

Required accessories:
- Leg set (A, see page 62)
- Holder (B, see page 63)
- Return unit (C, see page 64)
- Basic unit (D, see page 64)
- Gear motor (E, see page 163)
- Curve wheel (F, see pages 60, 66)
- Support holder (G)

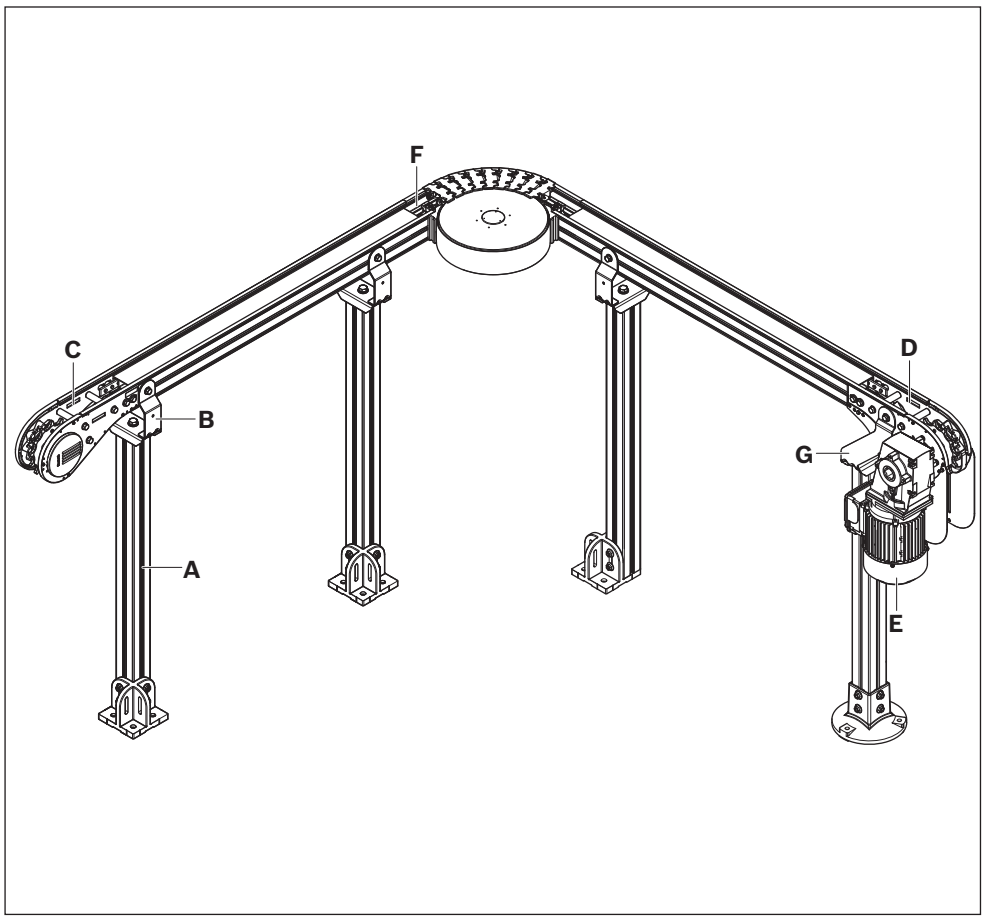

562 411-48

Fig. 48: ESD system, overview

ENGLISH

Required accessories:
- Foot (H_1, J_1)
- Strut profile (H_2, J_2)
- Cover cap (H_3, J_3)
- T-bolt (K)
- Flange nut (L)
- Floor dowel (M)
- Washer (N)

H_1:	**3842 527 553**
H_2:	**3842 992 444 / L**
H_3:	**3842 548 808** (gray) **3842 548 809** (ESD)
K:	**3842 528 721**
L:	**3842 345 081**
J_1:	**3842 527 553**
J_2:	**3842 992 426 / L**
J_3:	**3842 548 752** (gray) **3842 548 753** (ESD)
K:	**3842 528 721**
L:	**3842 345 081**
M:	**3842 526 561**
N:	**3842 528 189** (t = 1 mm) **3842 528 191** (t = 4 mm)

▶ Install the supports.

Please note:
Make sure that the leg sets and the VarioFlow *plus* modules cannot topple over during installation until you screw the system to the floor.

Leg sets, motor support

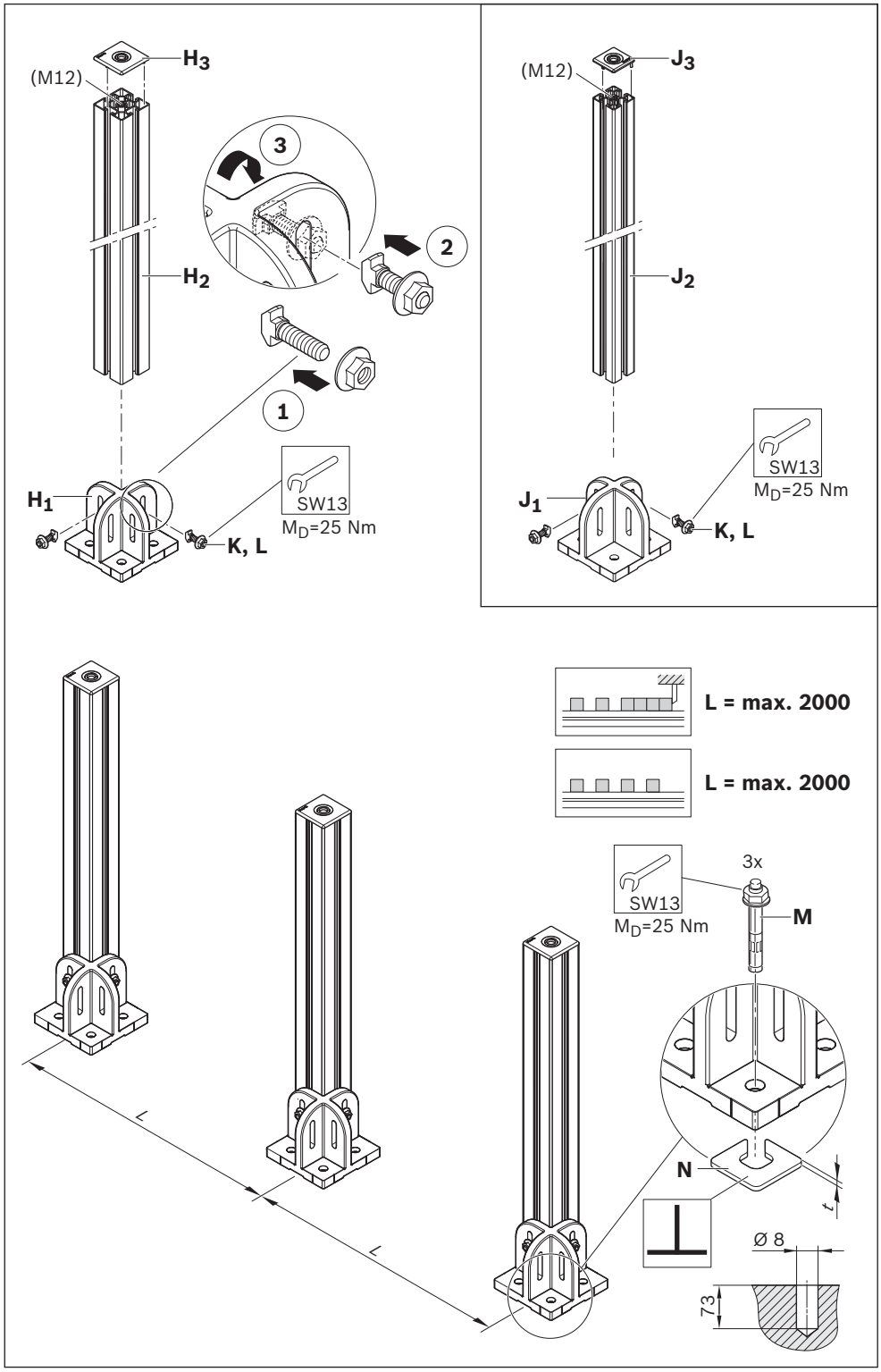

562 411-49

Fig. 49: ESD system, installing leg sets/motor support

Required accessories:
- Holder (O)
- MGE T-nut (P)

O, VF 65:	**3842 546 658**
O, VF 90:	**3842 546 659**
P:	**3842 530 287**

Use the MGE T-nut (P) instead of the STS T-nut (see [2])) included in the scope of delivery.

▶ Install the section profile on the supports.

Please note:
Make sure that the leg sets and the VarioFlow *plus* modules cannot topple over during installation until you screw the system to the floor.

[1]) Size shown

[2]) T-nut (scope of delivery)

Section on leg sets

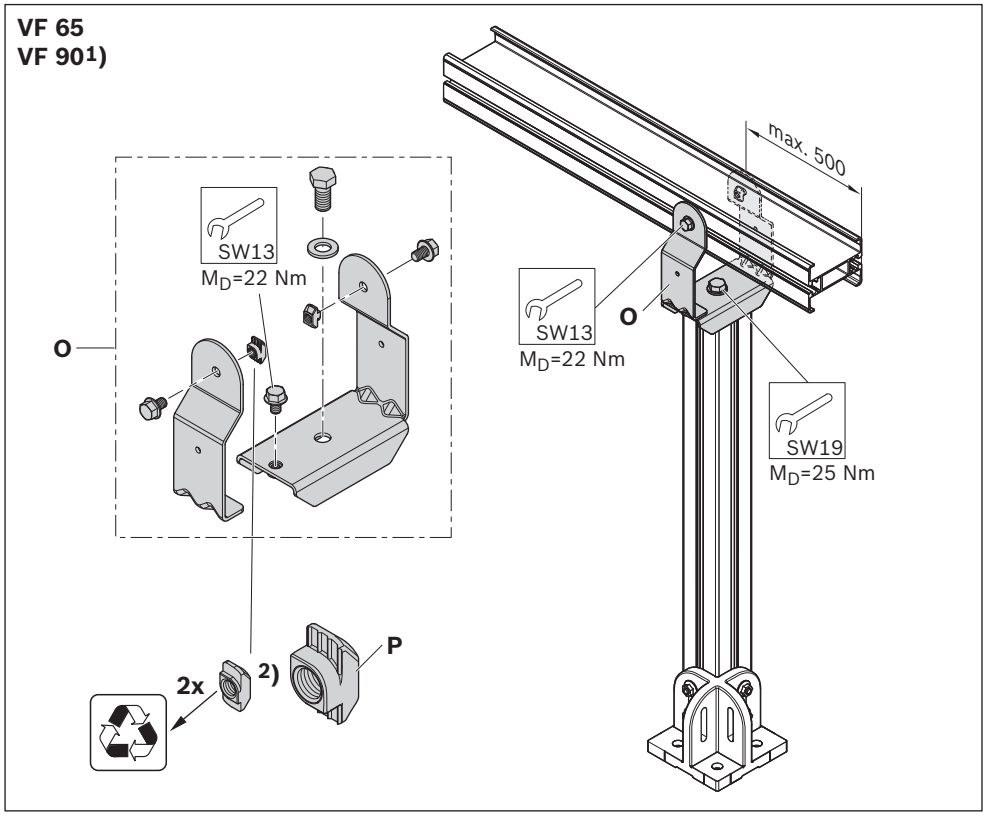

Fig. 50: ESD system, installing section on leg sets

ENGLISH

Required accessories:
- Curve wheel (Q)
- Only if required: Protective cover (R)

Q, VF 65,
30°: **3842 553 029**
45°: **3842 553 030**
90°: **3842 553 031**
180°: **3842 553 032**

Q, VF 90,
30°: **3842 553 033**
45°: **3842 553 034**
90°: **3842 553 035**
180°: **3842 553 036**

R, VF 65,
30°: **3842 551 545**
45°: **3842 551 546**
90°: **3842 551 547**
180°: **3842 551 548**

R, VF 90,
30°: **3842 551 549**
45°: **3842 551 550**
90°: **3842 551 551**
180°: **3842 551 552**

[1]) Size shown
[2]) Drilled hole for fixing the slide rail on the chain inlet (top = conveying), see page 75 and following.
[3]) Drilled hole for fixing the slide rail on the chain inlet (bottom side = chain return), see page 75 and following.

Curve wheel

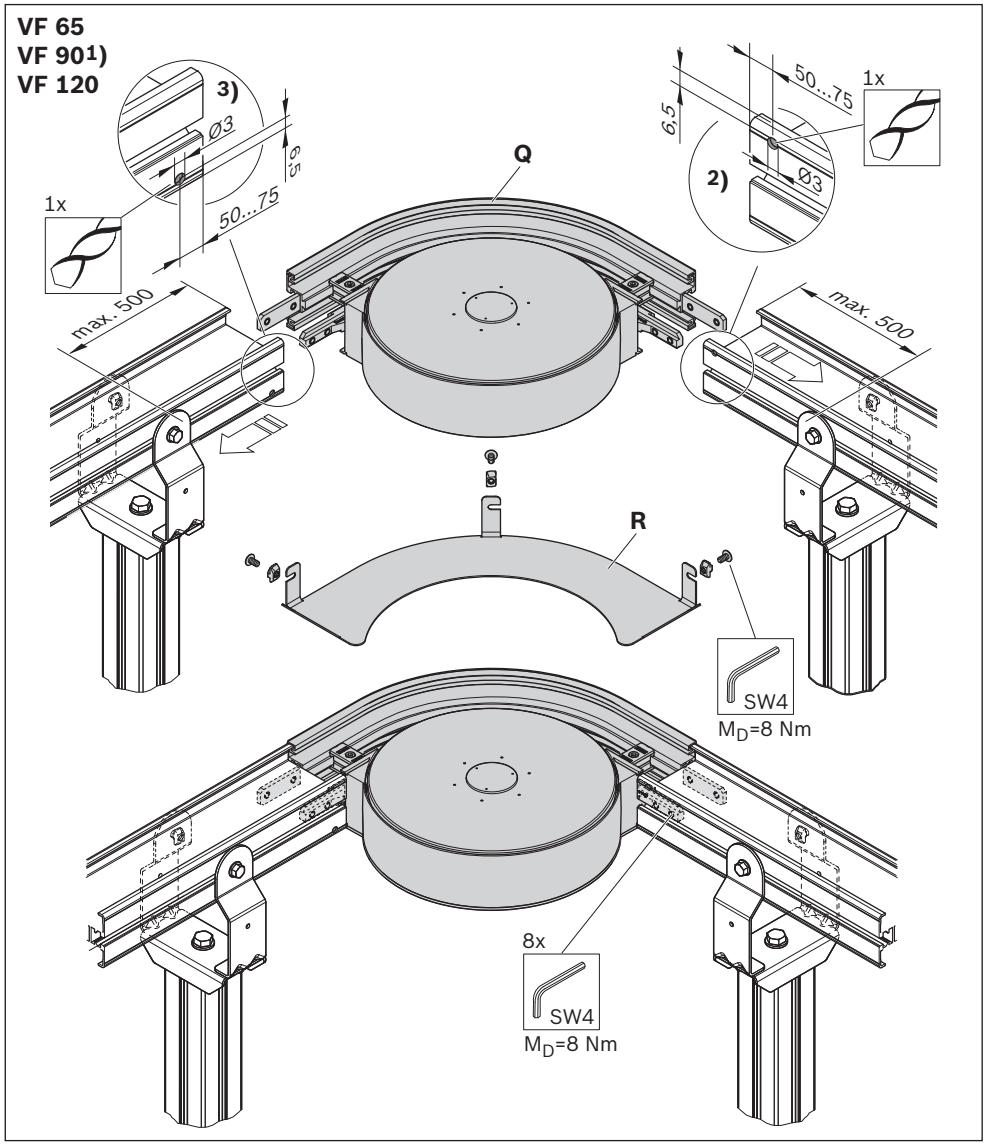

Fig. 51: ESD system, installing curve wheel

Please note:
For circuit systems without chain return in the bottom run (using a curve wheel or connection drive), use the protective cover (L) and closed profiles as a safety guard to prevent access from below.

Required accessories:
- Curve wheel 180° (Q)
- Drive kit (S), gear motor installation, see page 168.

K, VF 65:	**3842 553 032**
K, VF 90:	**3842 553 036**
S:	**3842 998 742**

1. Install the curve wheel.
2. Install the cover (x) on the mounting bracket (y).
3. Tighten the screws (z) until they are flush with the outer surface.
4. Install the flange (S) in the correct position (see [3]), flange can only be installed in the correct position).

Please note:
- Support the curve wheel drive (leg set is not included in the scope of delivery).
- Make sure that the leg sets and the VarioFlow *plus* modules cannot topple over during installation until you screw the system to the floor.

For further information, please refer to page 24.

[1]) Size shown

[2]) Drilled hole for fixing the slide rail, see page 75 and following.

Installing the curve wheel drive

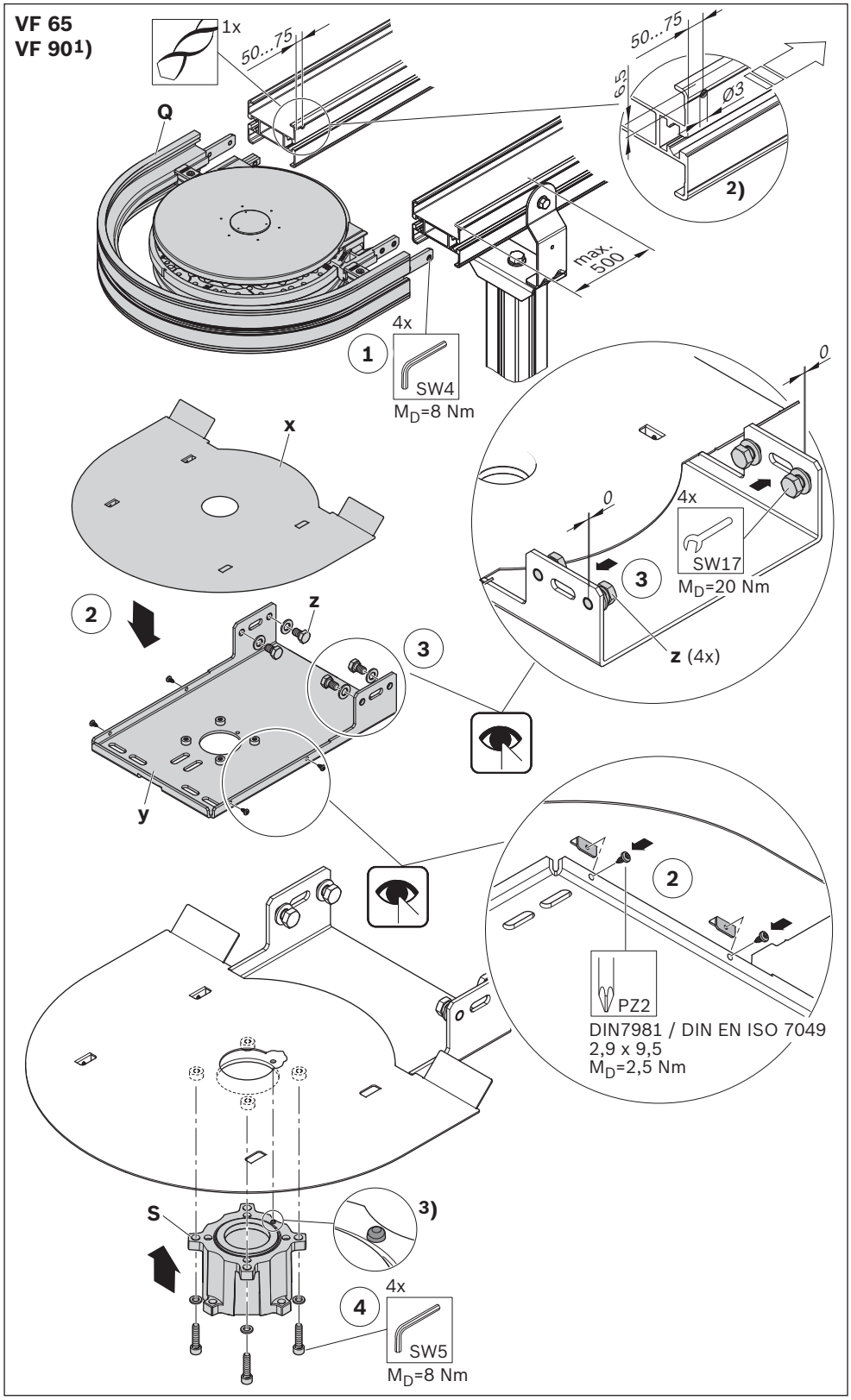

Fig. 52: ESD system, installing curve wheel drive

ENGLISH

5. Install the pre-assembled mounting bracket (y).
6. Install the support (v).
7. Install the leg set (T, not included in scope of delivery).

▶ Further assembly steps:
- Slide rail installation, see page 75.
- Gear motor installation, see page 168.

[1]) Size shown

Drilled hole for fixing the slide rail, see page 75 and following.

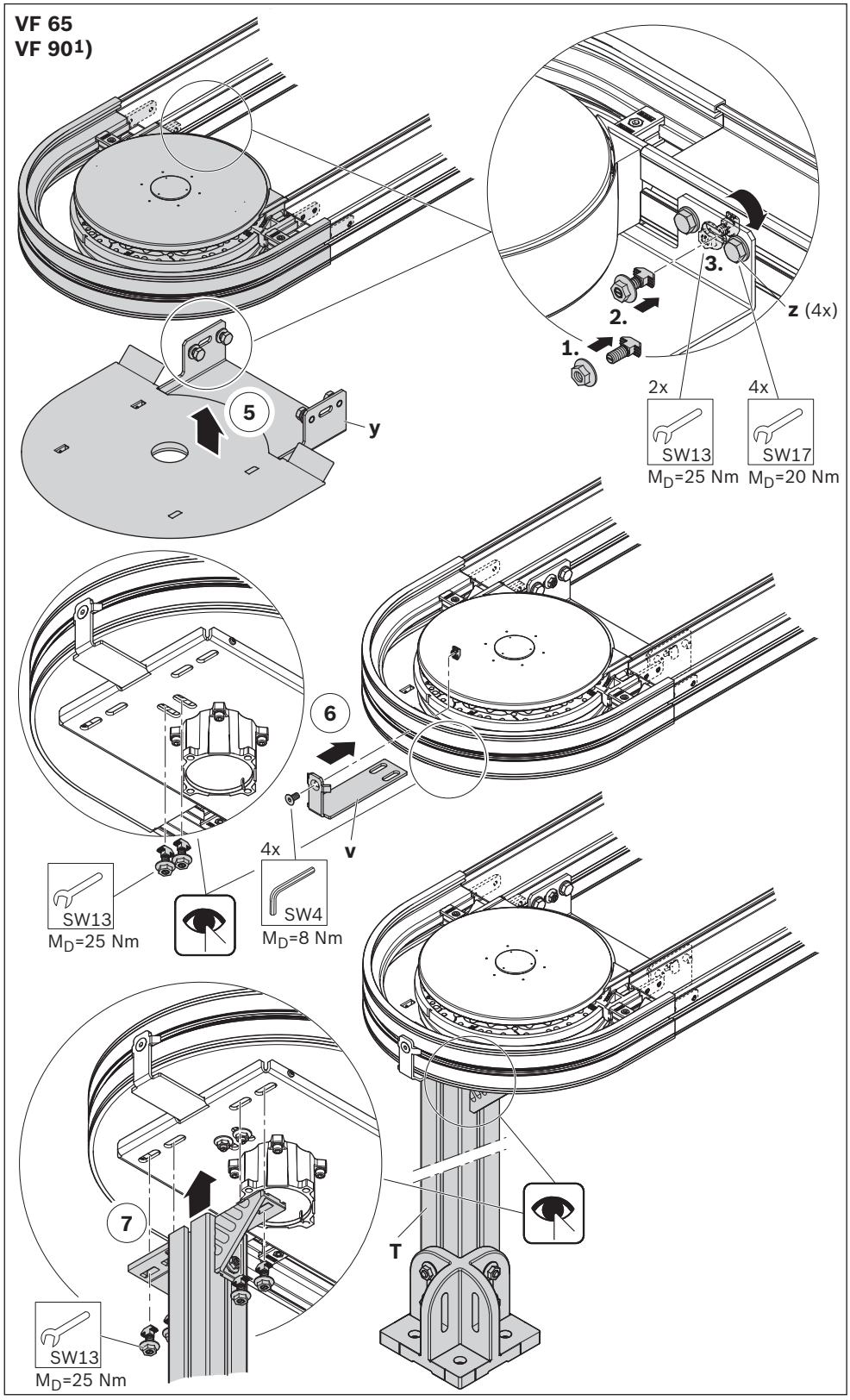

Fig. 53: ESD system, installing curve wheel drive

Required accessories:
- Return unit (U)
- Adapter AL-STS

U, VF 65:	**3842 547 528**
U, VF 90:	**3842 547 529**
AL-STS:	**3842 552 948**

Please note:
Make sure that the leg sets and the VarioFlow *plus* modules cannot topple over during installation until you screw the system to the floor.

[1]) Size shown

[2]) Drilled hole for fixing the slide rail, see page 75 and following.

Return unit

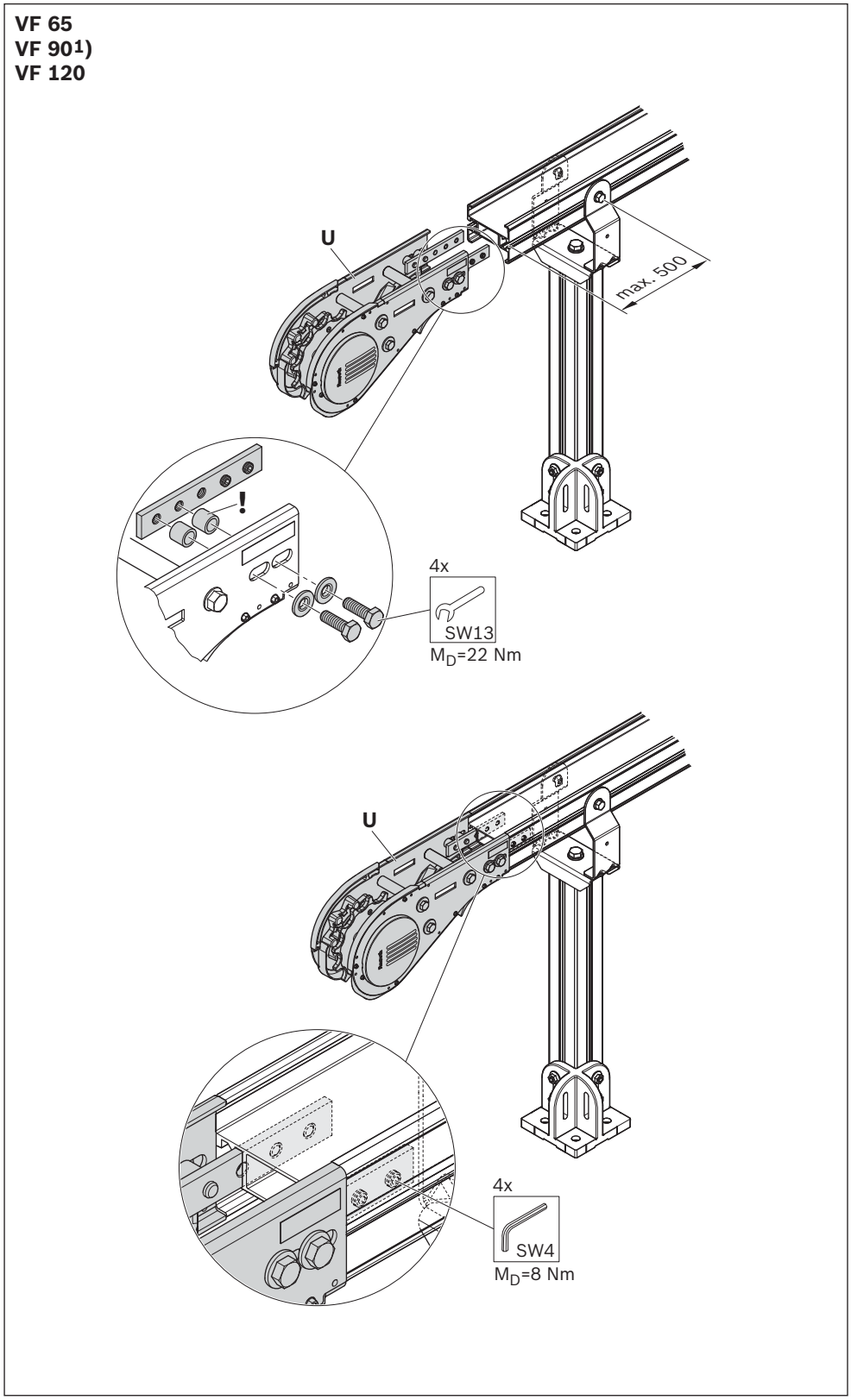

Fig. 54: ESD system, installing return unit

Required accessories:
- Basic unit (V), guard plates (y), not installed.
- Adapter AL-STS
- Chain sprocket (W)
- Holder (X)

V, VF 65:	**3842 547 522**
V, VF 90:	**3842 547 523**
AL-STS:	**3842 552 948**
W, VF 65:	**3842 553 047**
W, VF 90:	**3842 553 048**
X, VF 65:	**3842 559 114**
X, VF 90:	**3842 559 115**

Please note:
- You can also install the guard plates (x) later, after closing the conveyor chain.
- Make sure that the leg sets and the VarioFlow *plus* modules cannot topple over during installation until you screw the system to the floor.
- The chain sprocket is required for ascending and descending sections or to prevent the chain bag from swinging out

▶ Further assembly steps:
- Slide rail installation, see page 75.
- Gear motor installation, see pages 161, 162.
- Motor support installation, see page 62.

[1]) Size shown

[2]) The Machinery Directive 2006/42/EC requirement for captive screws on protective covers is fulfilled if this locking washer (y) is fitted.

Basic unit

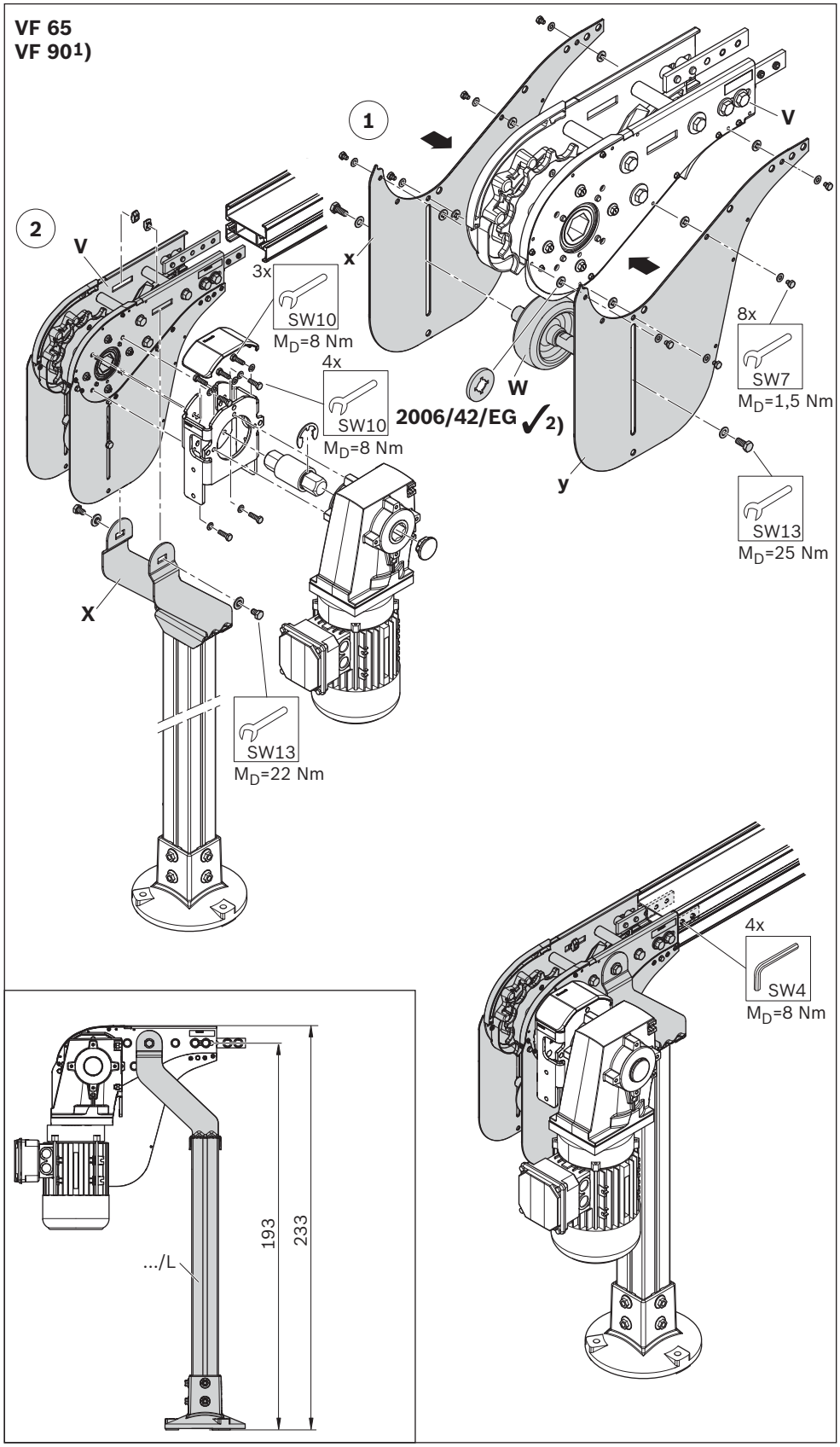

Fig. 55: ESD system, installing basic unit

Required accessories:
- Connection drive (Y), ready-mounted with protective case (z)
- Connection kit,
  – passive
  – active
- Adapter AL-STS

Y, VF 65:	**3842 553 914**
Y, VF 90:	**3842 553 915**
AL-STS:	**3842 552 948**

For connection kits, see section **7.5.8 Connection kit**, page 93

Please note:
Make sure that the leg sets and the VarioFlow *plus* modules cannot topple over during installation until you screw the system to the floor.

[1]) Size shown

Drilled hole for fixing the slide rail, see page 75 and following.

Connection drive

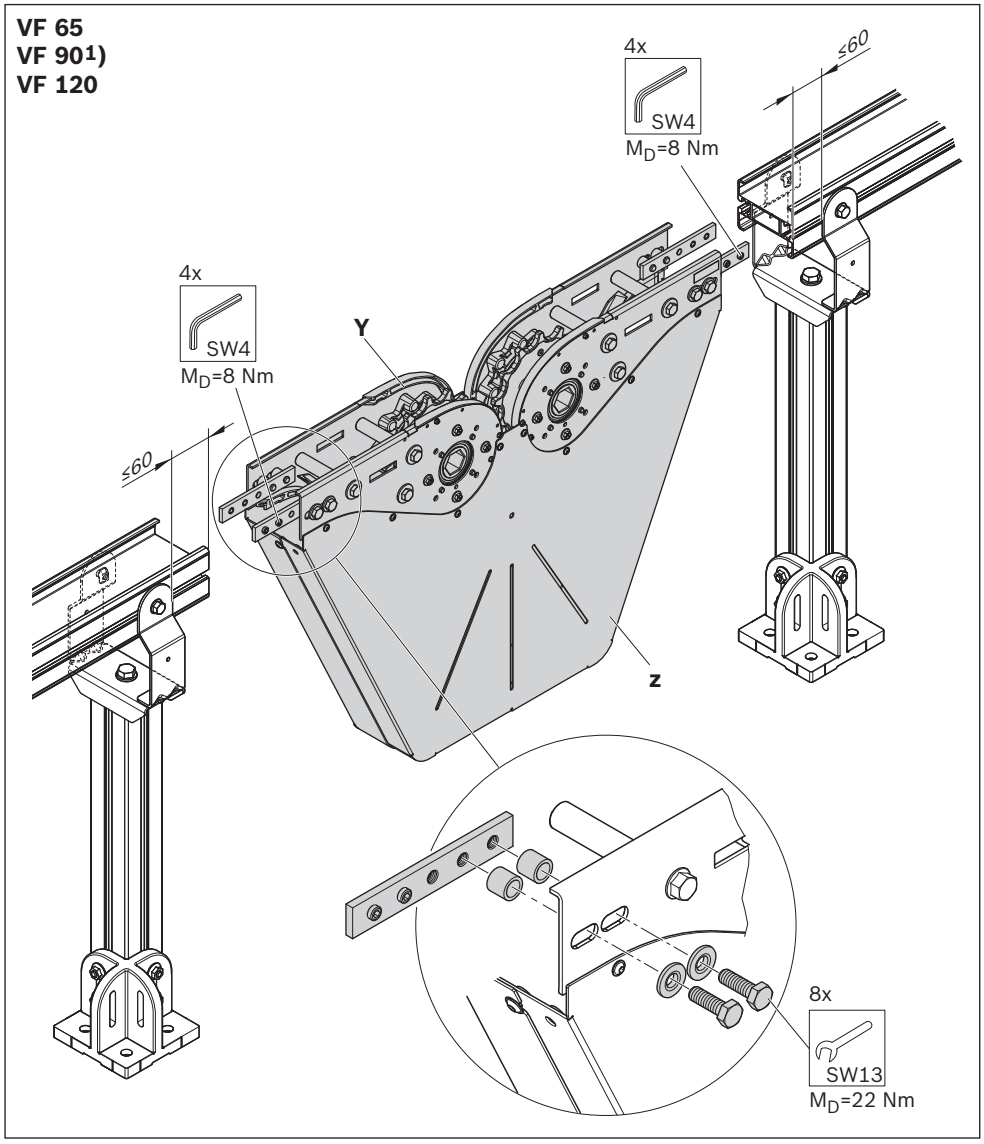

Fig. 56: ESD system, installing connection drive (1/6)

ENGLISH

Required accessories:
- Center drive (Z)
- Adapter AL-STS

Z, VF 65:	**3842 552 940**
Z, VF 90:	**3842 552 941**
Z, VF 120:	**3842 552 942**
AL-STS:	**3842 552 948**

Please note:
- Make sure that the leg sets and the VarioFlow *plus* modules cannot topple over during installation until you screw the system to the floor.
- A center drive and transmission drive combination is not possible.

[1]) Size shown

Drilled hole for fixing the slide rail, see page 75 and following.

Center drive

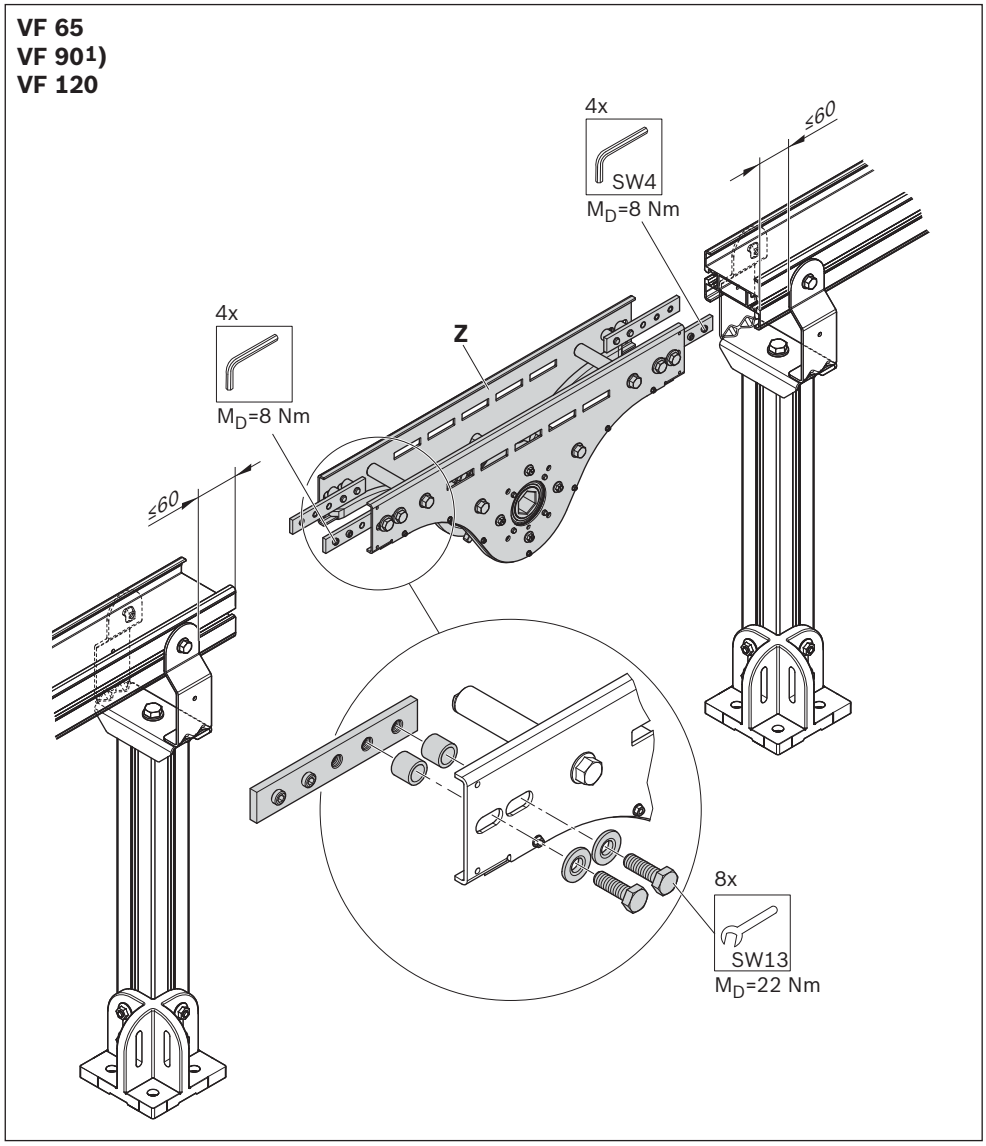

Fig. 57: ESD system, installing center drive

1.1.9 Alpine conveyor

90° return unit AL, STS

Required accessories:
• 90° return unit (A)

A, VF 65:	**3842 552 984**
A, VF 90:	**3842 552 985**

Please note:
Make sure that the leg sets and the VarioFlow *plus* modules cannot topple over during installation until you screw the system to the floor.
[1]) Size shown

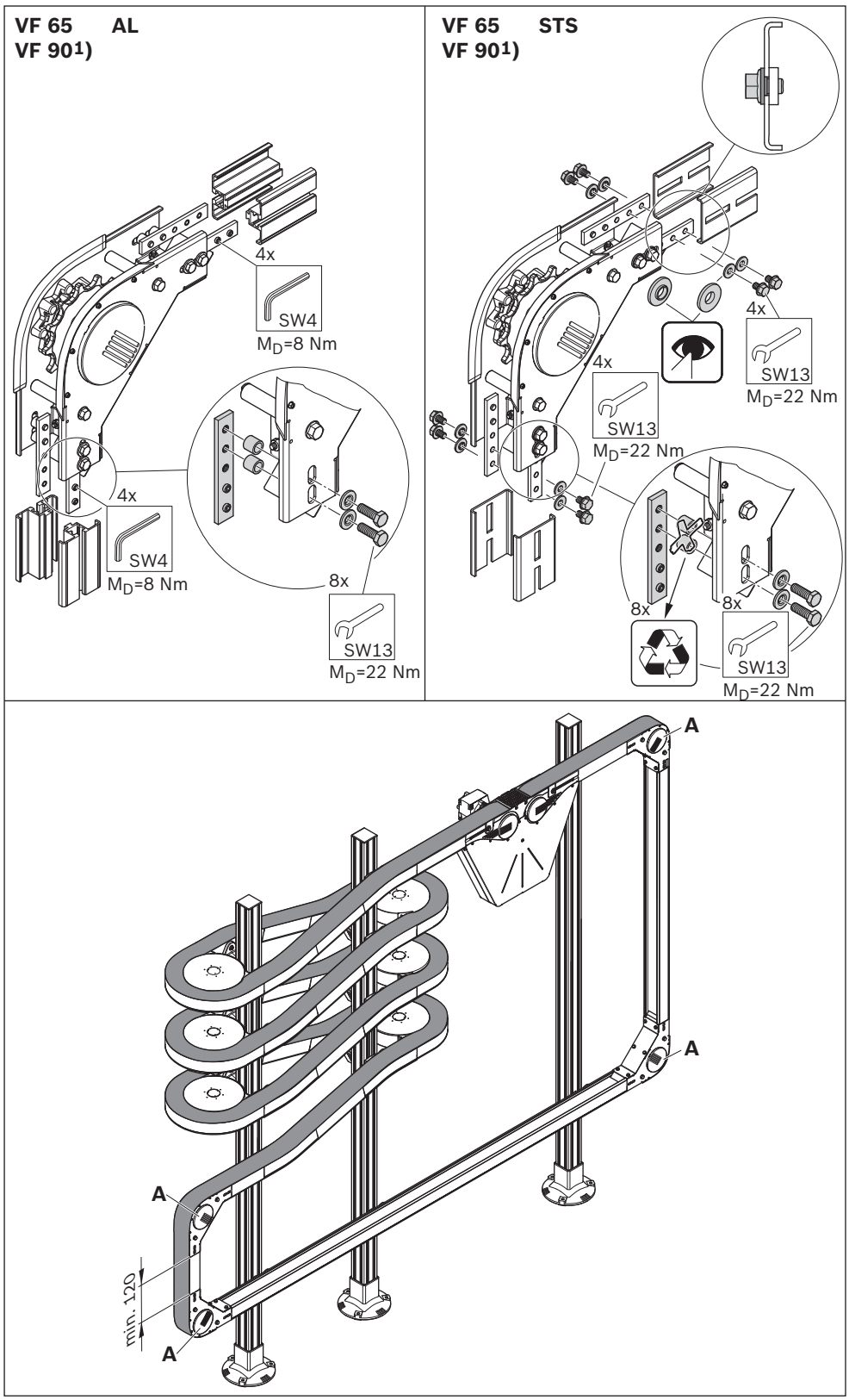

562 411-58

Fig. 58: Example of installation of alpine conveyor with connection drive, 90° return unit

ENGLISH

Required accessories:
- Drive kit (B)
- Connection kit (C)

Gear motor installation, see page 168.

B:	**3842 998 742**
C:	**3842 998 776**

1. Open the hex socket on the upper side of the curve wheel.
2. Install the drive kit (B, see pages 23 + 168).
3. Install the connection kit (C_1, C_2, C_3).

Please note:
Make sure that the leg sets and the VarioFlow *plus* modules cannot topple over during installation until you screw the system to the floor.

Alpine conveyor connection kit

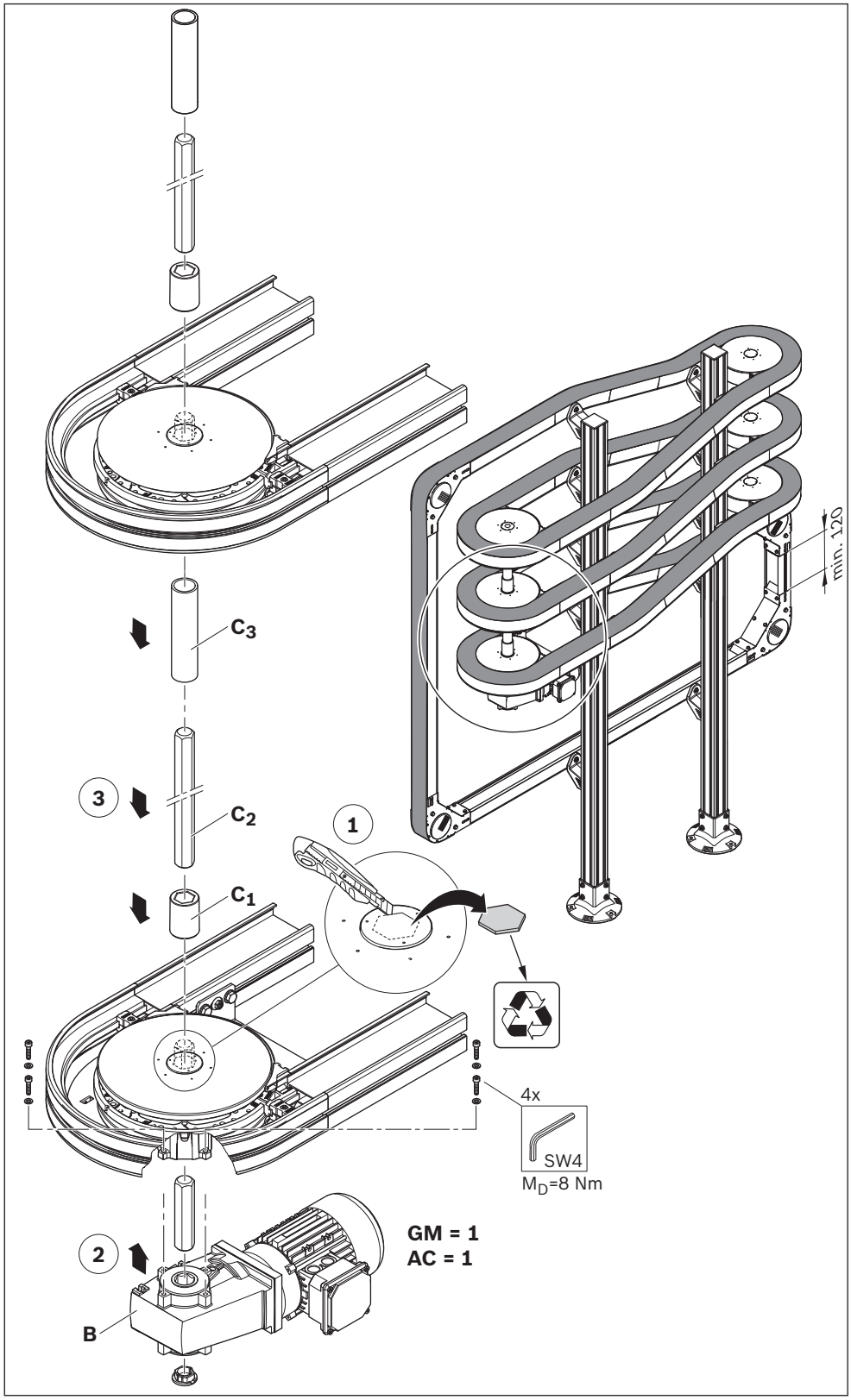

Fig. 59: Example of installation of alpine conveyor with curve wheel drive, connection kit

1.1.10 Wedge conveyor

Required accessories:
- Adjustment unit (A)
- Crank handle (B)
- Connection kit (C)
- Profile rail D12 (D)
- 60x60 bracket (E)
- HS10-M8x20 T-bolt (F)
- M8 flange nut (G)
- ISO 4762-M6x16 (H)

A:	**3842 547 971**
B:	**3842 547 990**
C:	**3842 547 729**
D:	**3842 993 306/...**
E:	**3842 523 546**
F:	**3842 528 715**
G:	**3842 345 081**

▶ Install the wedge conveyor.

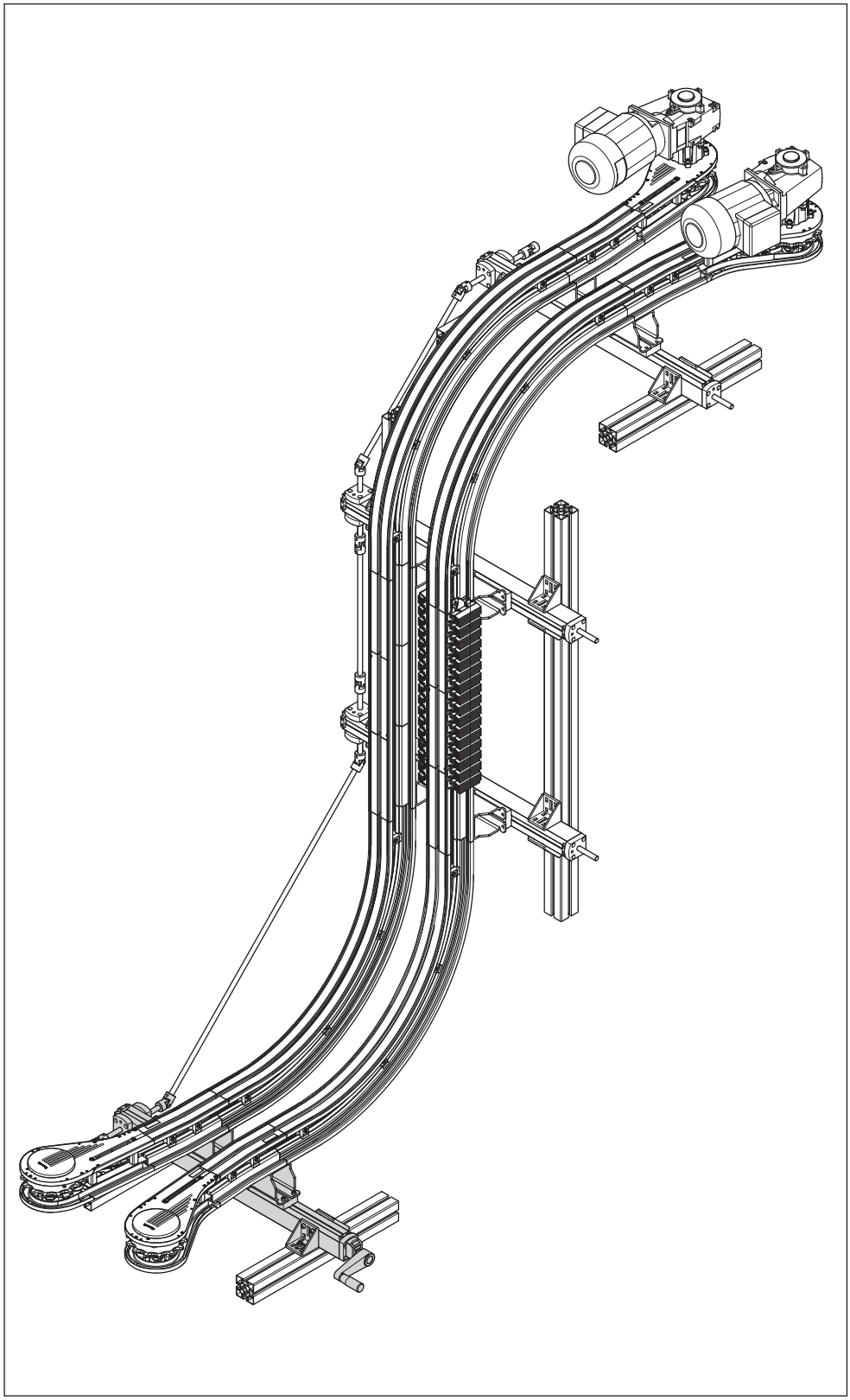

562 411-60

Fig. 60: Installing adjustment unit (1/2)

ENGLISH

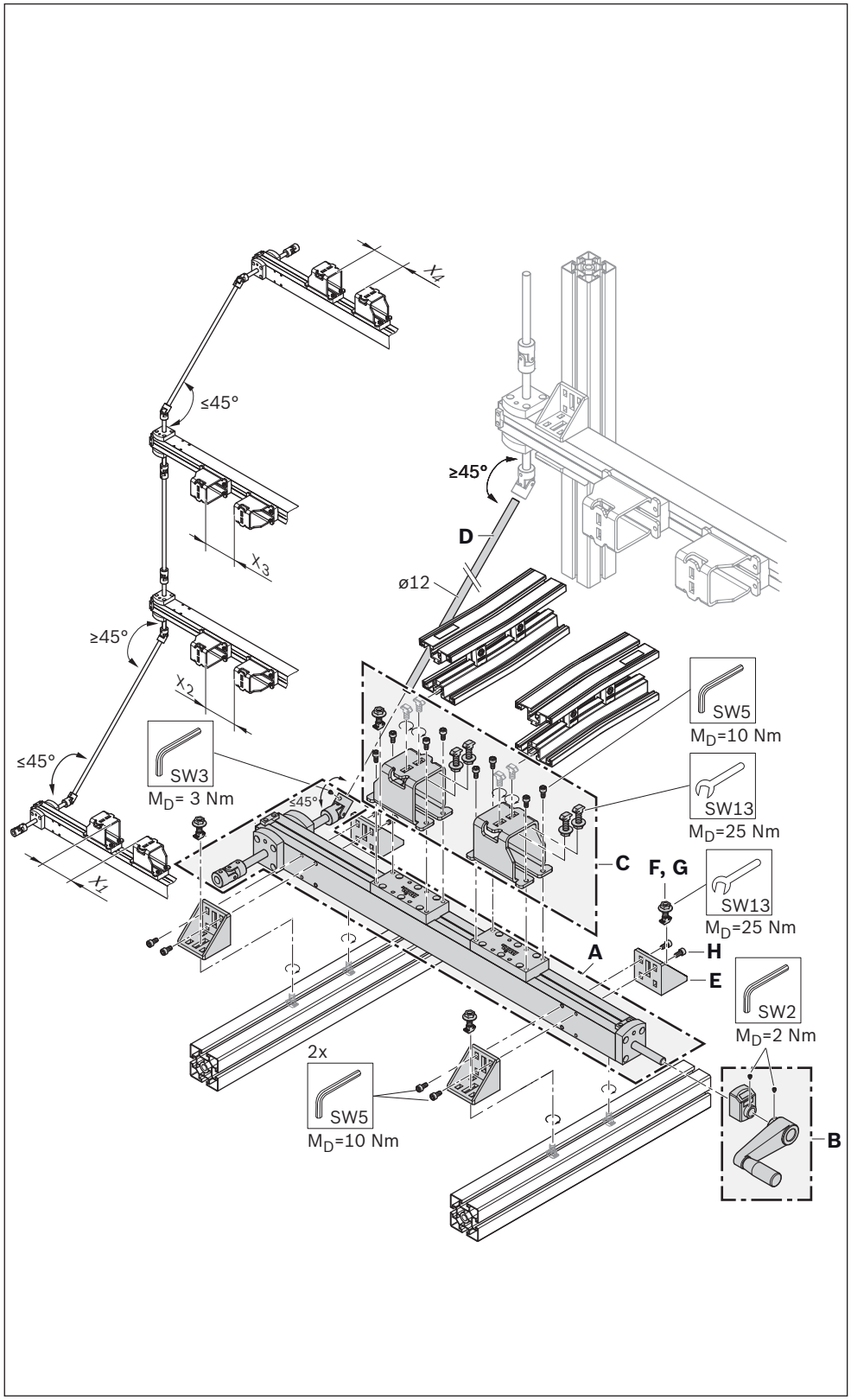

Fig. 61: Installing adjustment unit (2/2)

1.1.11 Slide rail

Please note:

- If possible, install the slide rail in a single piece [1][2][3]) extending across all the modules without any breaks.

[1]) Length max. 10 m

[2]) If a break is required, **never** place it at a module interface, always overlap the interface by at least 150 mm.

[3]) Place the break in the slide rail ~ 150 mm after horizontal sliding curves on the inside of the curve. This expansion joint is required due to the higher loading of the inside of the curve.

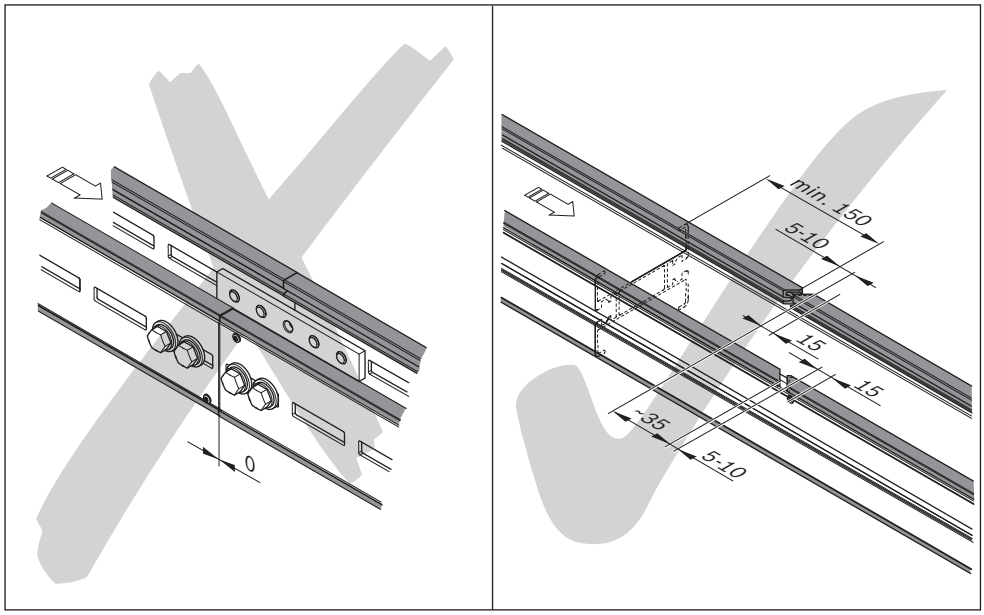

562 411-62

Fig. 62: Slide rail interface

- Always install the slide rail in the direction of travel of the chain.
  - For the conveying side, start at the return unit.
  - For the chain return, start on the bottom side of the basic unit.
  "Chain start" = zero-gap.
- Fix the start of each section of the slide rail in place.
  Conveying side:
  - after the return unit (section and support profile)
  - after a curve wheel (inside of the section profile)
  - after a roller curve (inside of the support profile)
  Chain return:
  - after the basic unit
  - after a curve wheel (inside of the section profile)

ENGLISH

Required accessories
- Slide rail (A)
- Assembly tool for slide rail (B)
- Screws (C) for fixing the slide rail in place.

B:	**3842 547 463**
C, AL:	**3842 547 908**
STS:	**3842 533 915**

1. Cut the start of the slide rail to shape.
2. Press the start of the slide rail onto the section profile.
3. Apply the assembly tool and draw the section profile through it; this shapes the slide rail to match the section profile.
4. Fix the start of the slide rail in place by screwing it down (AL: countersunk screw, STS: oval-head screw).

[1]) Size shown

Slide rail, (section profile)

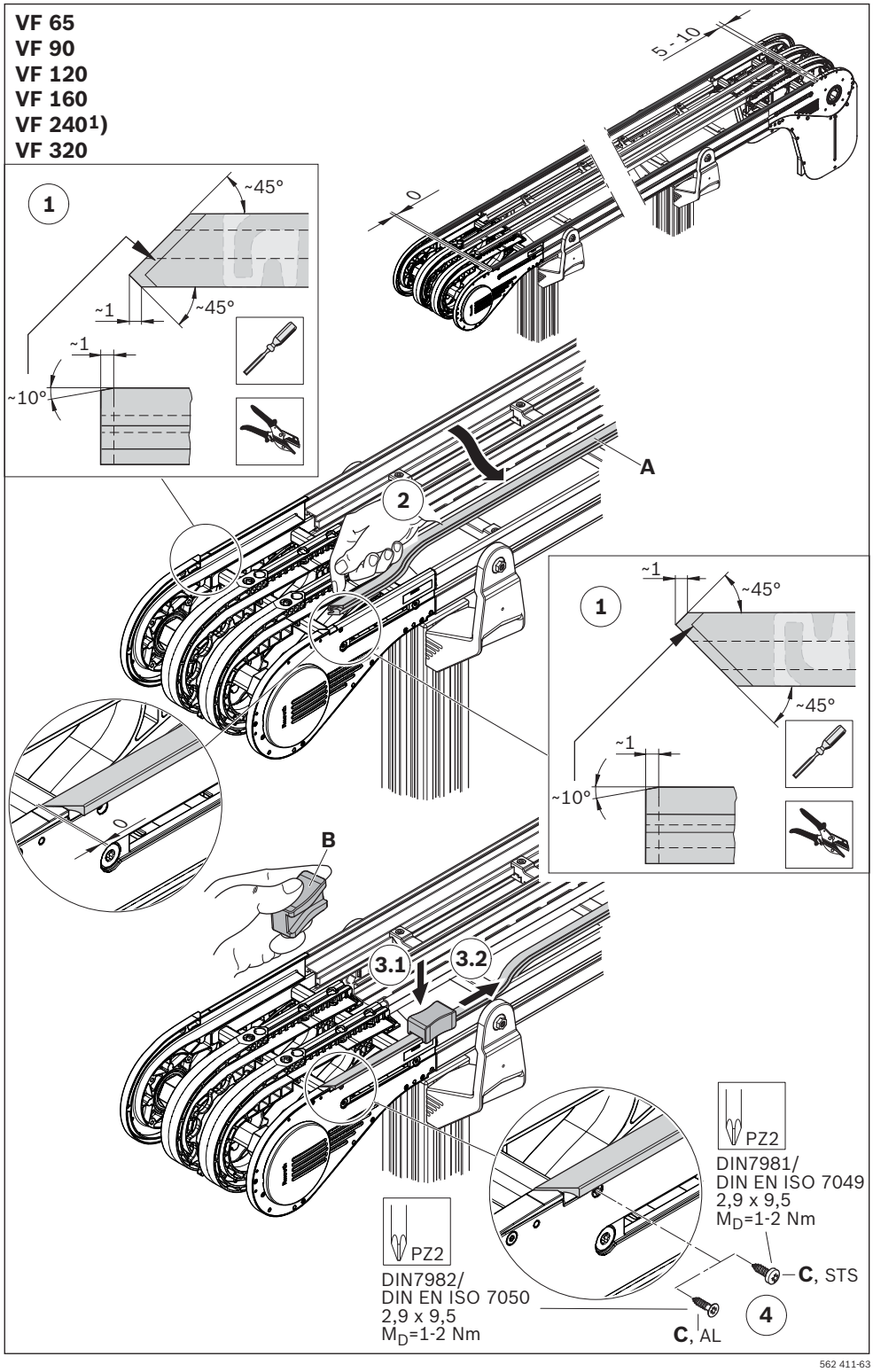

Fig. 63: Installing slide rail (section profile)

Slide rail (section profile, chain return)

1. Cut the start of the slide rail to shape.
2. Press the start of the slide rail onto the section profile.
3. Apply the assembly tool and draw the section profile through it; this shapes the slide rail to match the section profile.
4. Fix the start of the slide rail in place by screwing it down (AL: countersunk screw, STS: oval-head screw).

[1]) Size shown

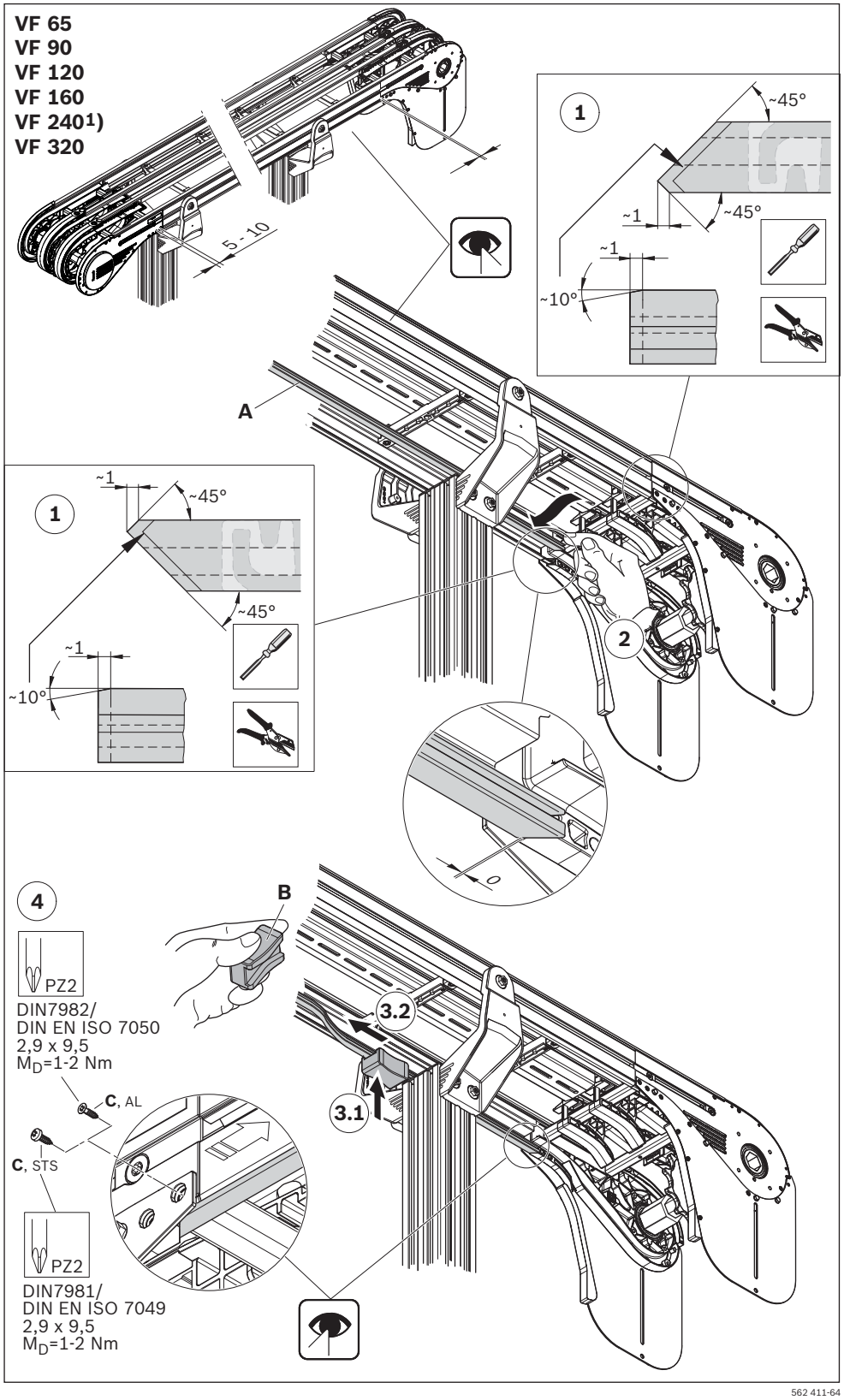

Fig. 64: Installing slide rail (section profile, chain return)

ENGLISH

Slide rail (support profile), only for VF 160 / VF 240 / VF 320

Required accessories
- Slide rail (A)
- Assembly tool for slide rail (B)
- Screws (C) for fixing the slide rail in place.

B:	**3842 547 463**
C, STS:	**3842 533 915**

1. Cut the start of the slide rail to shape.
2. Press the start of the slide rail onto the section profile.
3. Apply the assembly tool and draw the section profile through it; this shapes the slide rail to match the section profile.
4. Fix the start of the slide rail in place by screwing it down (AL/STS: oval-head screw).

[1]) Size shown

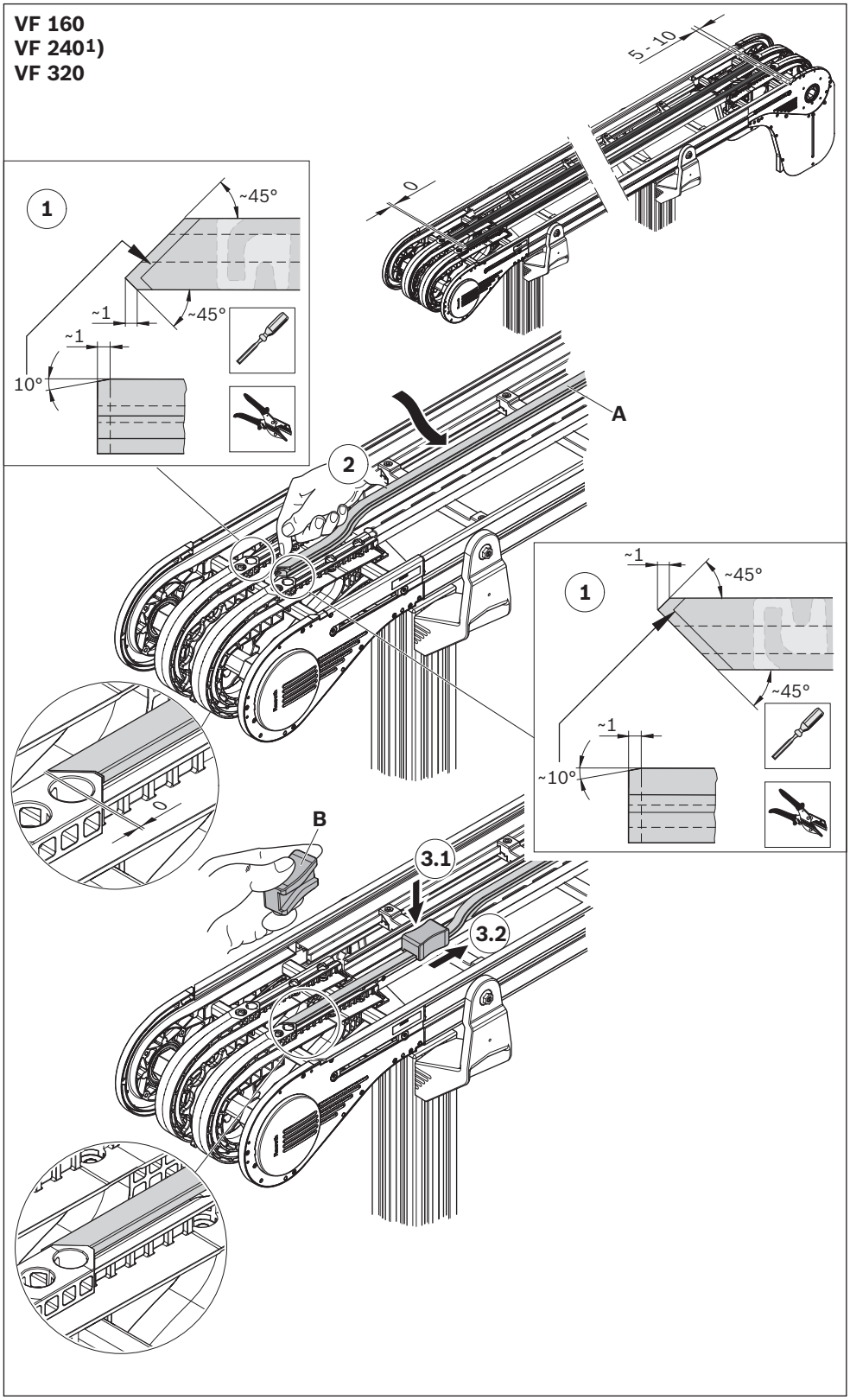

Fig. 65: Installing slide rail (support profile)

Required accessories
- Slide rail (A)
- Assembly tool for slide rail (B)
- Screws (C) for fixing the slide rail in place.

B:	**3842 547 463**
C, AL:	**3842 547 908**
STS:	**3842 533 915**

1. Cut the start of the slide rail to shape.
2. Press the start of the slide rail onto the section profile.
3. Apply the assembly tool and draw the section profile through it; this shapes the slide rail to match the section profile.
4. Fix the start of the slide rail in place by screwing it down (AL: countersunk screw, STS: oval-head screw).

[1]) Size shown

Slide rail (longitudinal end connection for connecting slide rails)

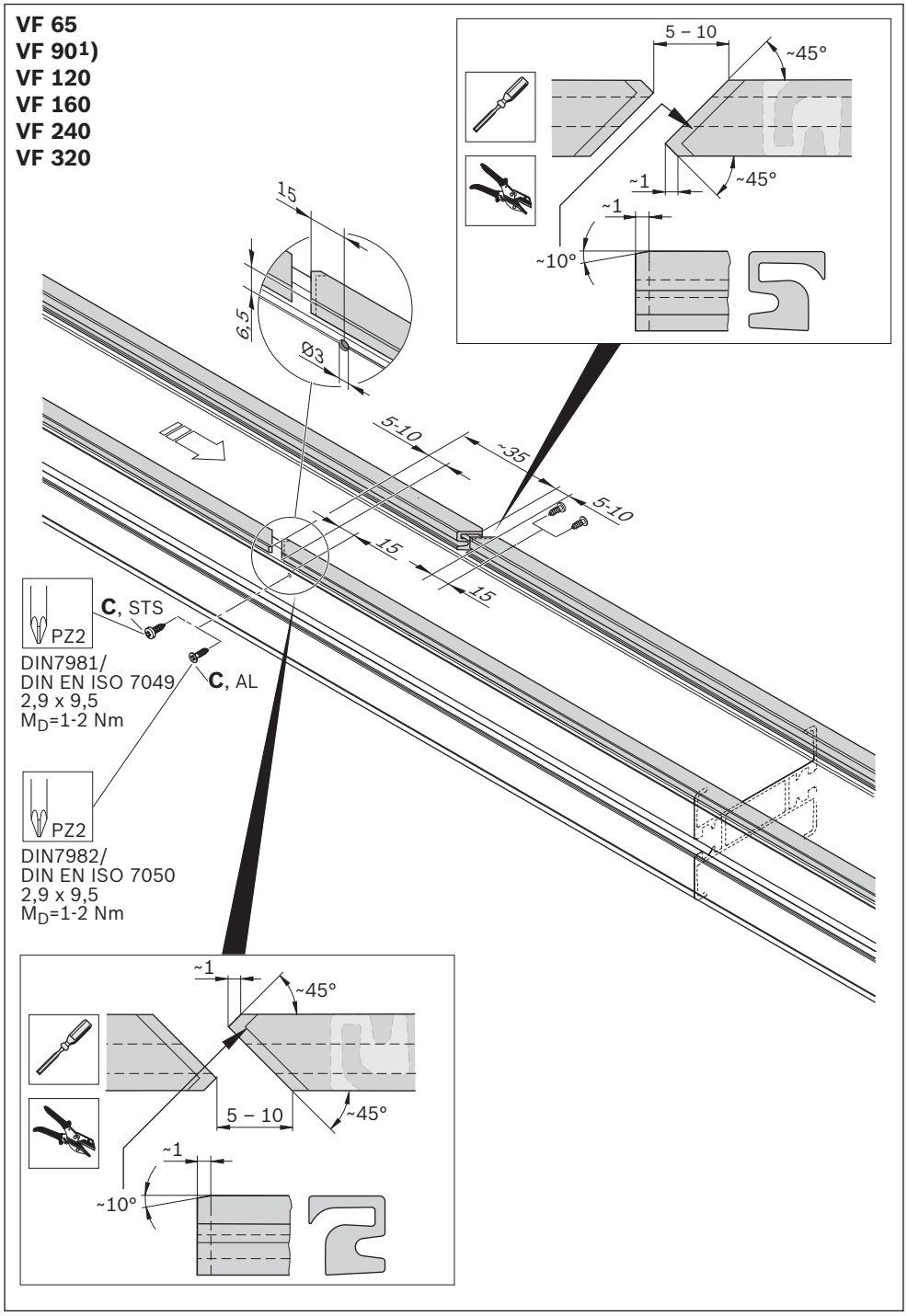

Fig. 66: Installing slide rail (longitudinal end connection for connecting slide rails)

ENGLISH

Required accessories
- Slide rail (A)
- Assembly tool for slide rail (B)
- Screws (C) for fixing the slide rail in place.

B:	**3842 547 463**
C, AL:	**3842 547 908**
STS:	**3842 533 915**

Please note:
- Fix the start of the slide rail in place by screwing it down (towards front in conveying direction (see [2])). The drilled holes have already been made.
- Slide rail interruption is only required on the side to be opened.
- For sizes 160-320: Do not interrupt the support profile with slide rail to increase smooth running.

[1]) Size shown
[2]) Fastening the slide rail (AL: countersunk screw, STS: Oval-head screw)

Slide rail, AL system assembly module, only for VF 65 / VF 90 / VF 120

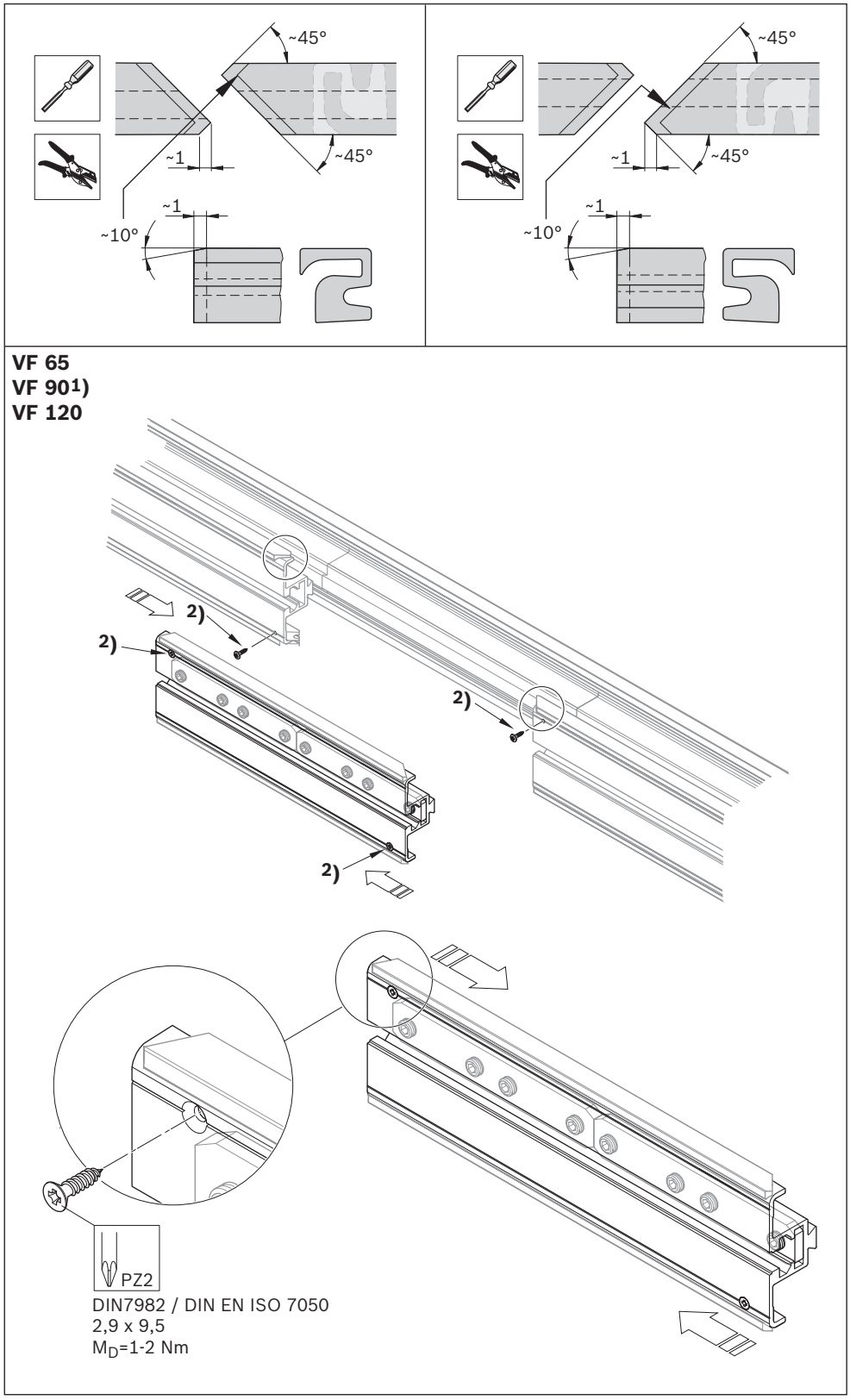

Fig. 67: Installing slide rail, AL system assembly module

Required accessories
- Slide rail (A)
- Assembly tool for slide rail (B)
- Screws (C) for fixing the slide rail in place.

B:	**3842 547 463**
C, AL:	**3842 547 908**
STS:	**3842 533 915**

Please note:
- Fix the start of the slide rail in place by screwing it down (towards front in conveying direction (see [2])). The drilled holes have already been made.
- Slide rail interruption is only required on the side to be opened.
- For sizes 160-320: Do not interrupt the support profile with slide rail to increase smooth running.

[1]) Size shown
[2]) Fastening the slide rail (AL: countersunk screw, STS: Oval-head screw)

Slide rail, STS system assembly module, only for VF 65 / VF 90 / VF 120

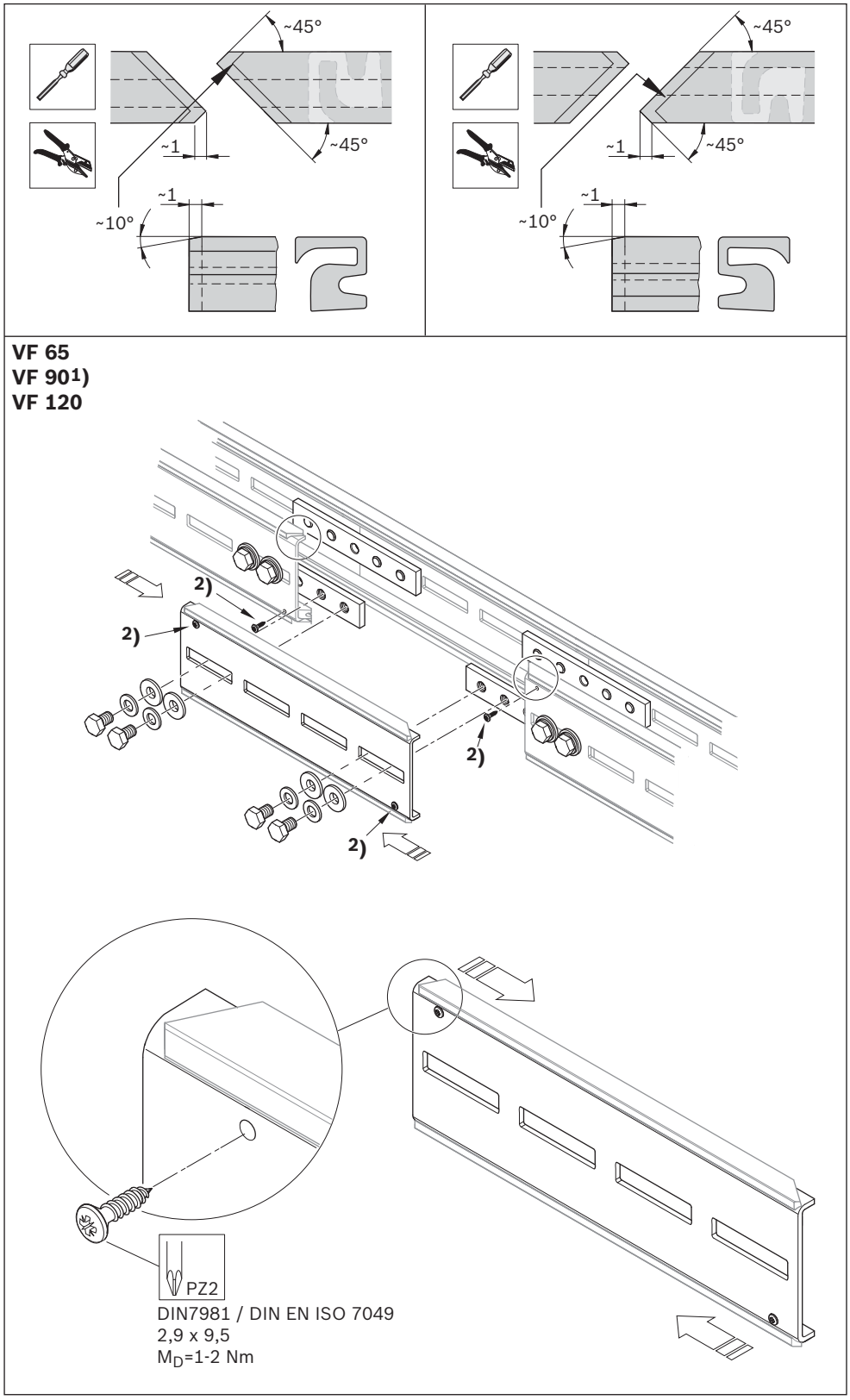

Fig. 68: Installing slide rail, STS system assembly module

ENGLISH

Required accessories
- Slide rail straight (D), STS

D, STS: **3842 552 970**

1. Cut the start of the slide rail to shape and round it off.
2. Install the slide rail on the section profile.
   Make sure that there are no gaps or differences in level at slide rail transitions.
3. Fix the slide rail in position with blind rivets.

[1]) Size shown

STS slide rail, section profile

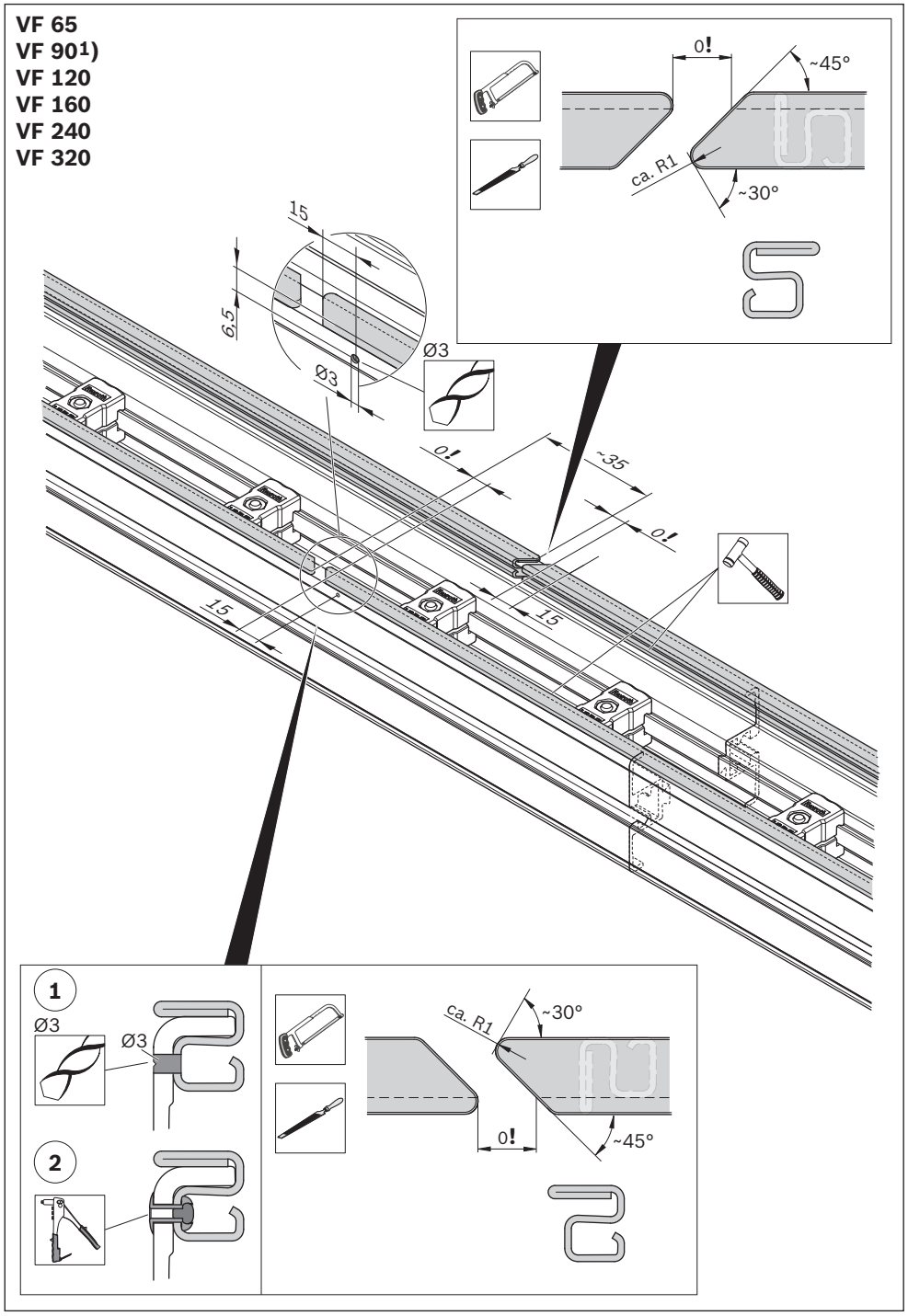

Fig. 69: Installing STS slide rail, section profile

STS slide rail, 30°, 45°, 90° curve wheel

Required accessories

- Slide rail curve wheel 30°, 45°, 90° (E), STS

E, VF 65,

30°: **3842 557 030**

45°: **3842 557 031**

90°: **3842 552 972**

E, VF 90,

30°: **3842 557 032**

45°: **3842 557 033**

90°: **3842 552 974**

1. Round the ends of the slide rail off.
2. Install the slide rail on the curve wheel.
   Make sure that there are no gaps or differences in level at slide rail transitions.
3. Fix the slide rail in position with blind rivets.

[1]) Size shown

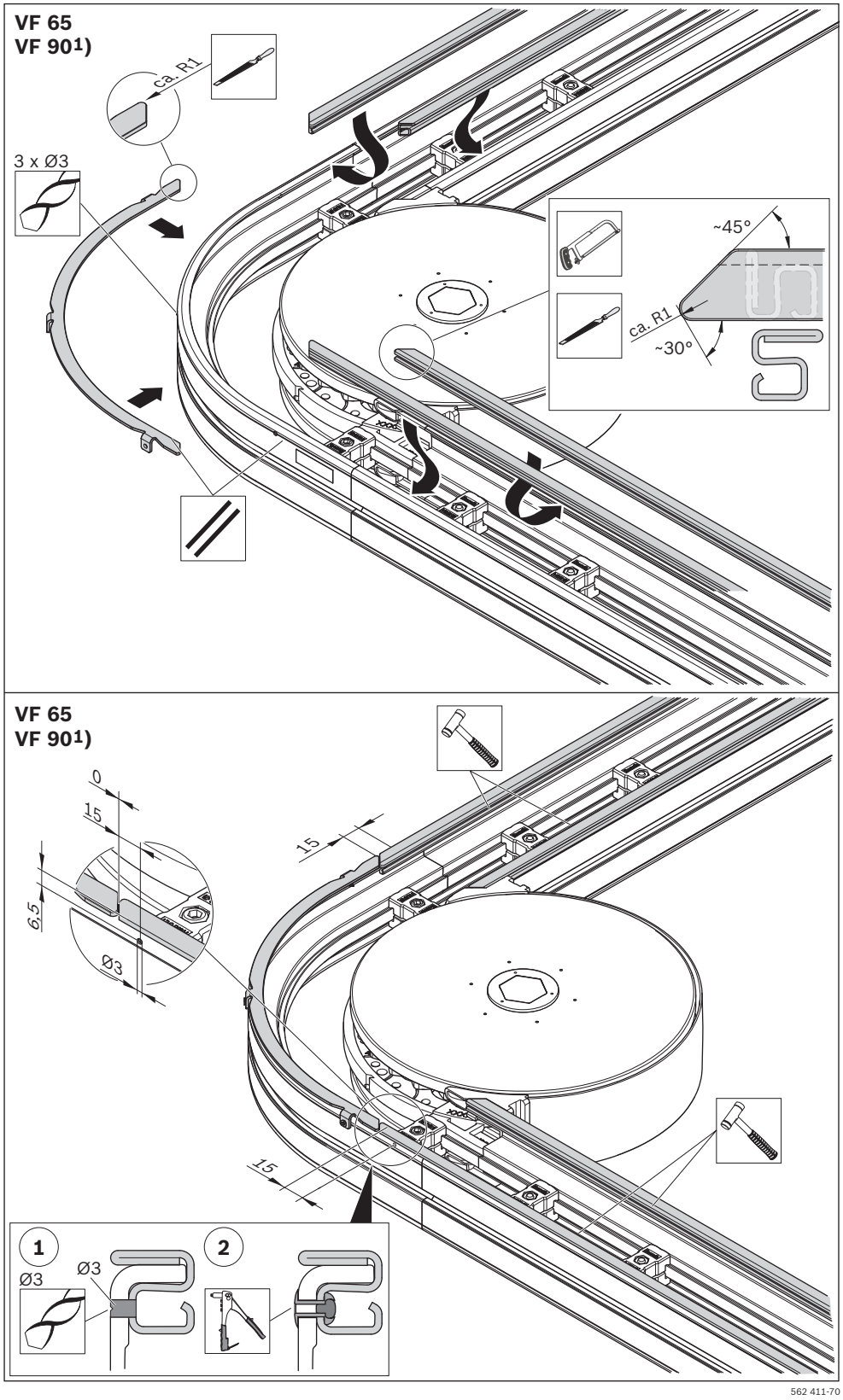

Fig. 70: Installing STS slide rail, 90° curve wheel

ENGLISH

STS slide rail, 180° curve wheel

Required accessories

- Slide rail curve wheel 180° (B), STS

F, VF 65:	**3842 552 973**
F, VF 90:	**3842 552 975**

1. Round the ends of the slide rail off.
2. Install the slide rail on the curve wheel.
   Make sure that there are no gaps or differences in level at slide rail transitions.
3. Fix the slide rail in position with blind rivets.

[1]) Size shown

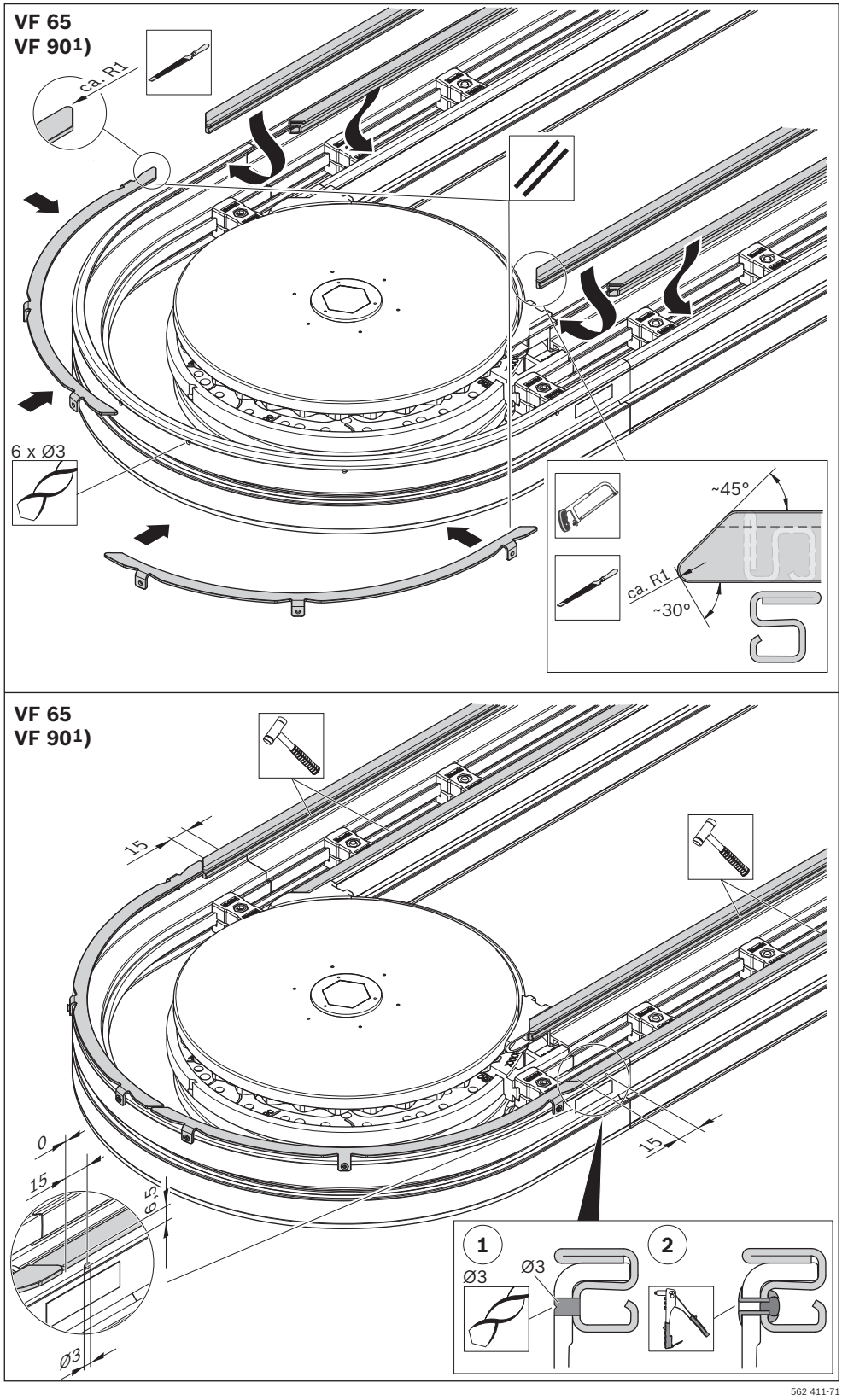

Fig. 71: Installing STS slide rail, 180° curve wheel

1.1.12 Conveyor chain

Conveyor chain, VF 65 / VF 90 / VF 120

Required accessories
- Assembly tool for conveyor chain (A)
- Chain sprocket (B)

A:	**3842 557 025**
B, VF 65:	**3842 553 047**
B, VF 90:	**3842 553 048**
B, VF 120:	**3842 553 049**

1. Guide the conveyor chain into the section along the bottom side of the basic unit.
2. Push / draw the conveyor chain over the basic unit drive gear.
3. Bring the ends of the chain together and use the assembly tool to close the chain (see page 87). Remove the basic unit guard plates.

Please note:
The conveyor chain lengthens as its overall period of operation increases (the chain bag enlarges and projects beyond the guard plates).
- The chain sprocket is required for ascending and descending sections or to prevent the chain bag from swinging out.

▶ Remove a few chain links from the conveyor chain (see page 88) after a break-in period of approx. 40 hours.

[1]) Size shown

[2]) The Machinery Directive 2006/42/EC requirement for captive screws on protective covers is fulfilled if this locking washer (x) is fitted.

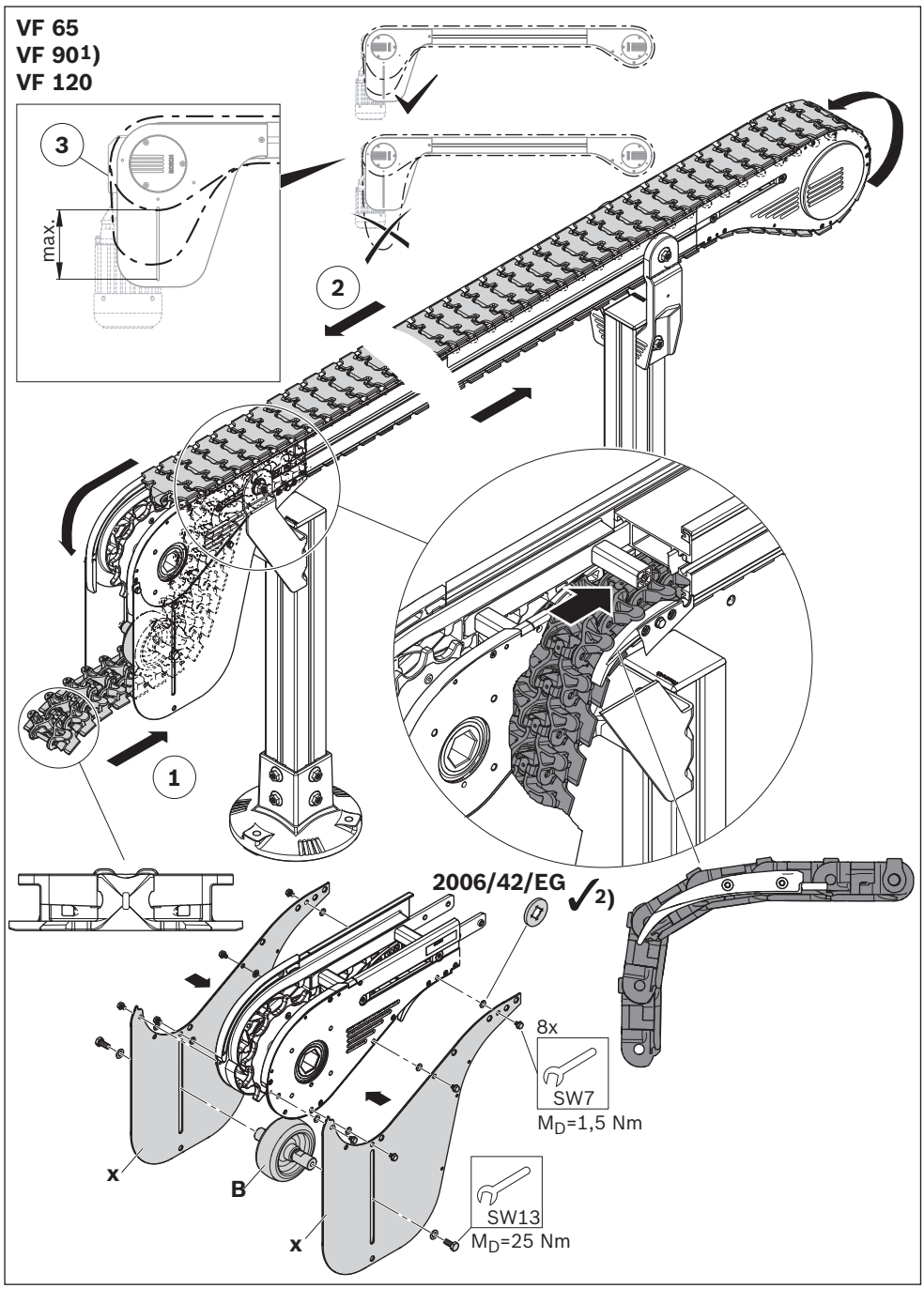

Fig. 72: Installing conveyor chain, VF 65 / VF 90 / VF 120

ENGLISH

Required accessories
- Assembly tool for conveyor chain (A)
- Chain sprocket (B)

A:	**3842 557 025**
B, VF 160	**3842 553 057**
B, VF 240	**3842 553 058**
B, VF 320	**3842 553 059**

1. Guide the conveyor chain into the section along the bottom side of the basic unit.
2. Push / draw the conveyor chain over the basic unit drive gear.
3. Bring the ends of the chain together and use the assembly tool to close the chain (see page 89). Remove the basic unit guard plates.)

Please note:
The conveyor chain lengthens as its overall period of operation increases (the chain bag enlarges and projects beyond the guard plates).
- The chain sprocket is required for ascending and descending sections or to prevent the chain bag from swinging out.

▶ Remove a few chain links from the conveyor chain (see page 90) after a break-in period of approx. 40 hours.

[1]) Size shown

[2]) The Machinery Directive 2006/42/EC requirement for captive screws on protective covers is fulfilled if this locking washer (x) is fitted.

Conveyor chain, VF 160 / VF 240 / VF 320

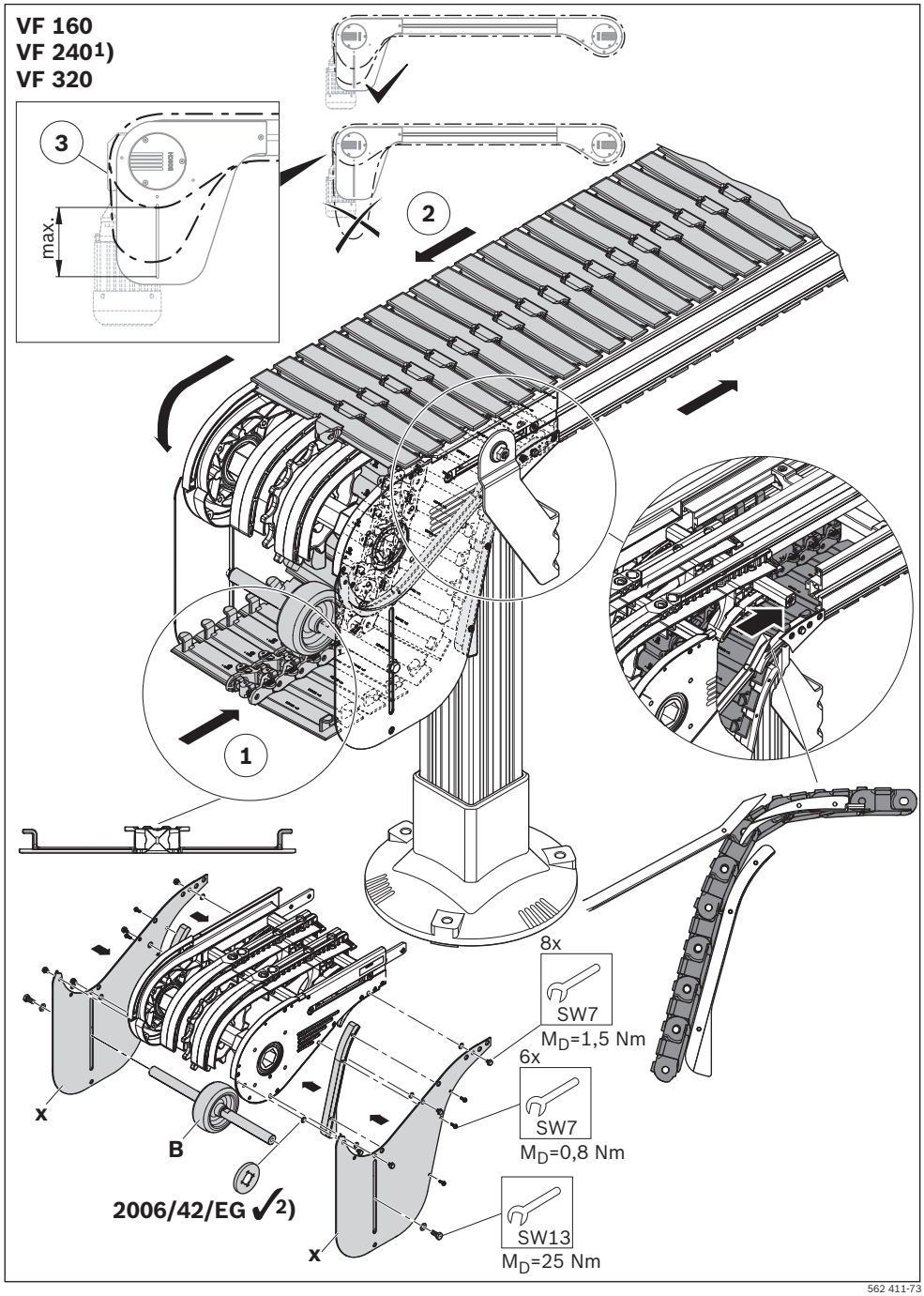

Fig. 73: Installing conveyor chain, VF 160 / VF 240 / VF 320

Chain assembly tool VarioFlow *plus*

Closing (extending) conveyor chain, VF 65 / VF 90 / VF 120

Required accessories

- Assembly tool for conveyor chain, **(3842 557 025)** consisting of:
  - Base plate (C)
  - Threaded sleeve (D)
  - Spindle (E)
  - Mandrel (F)

▶ Close (extend) the conveyor chain (VF 65 / VF 90 / VF 120).

[1]) Size shown

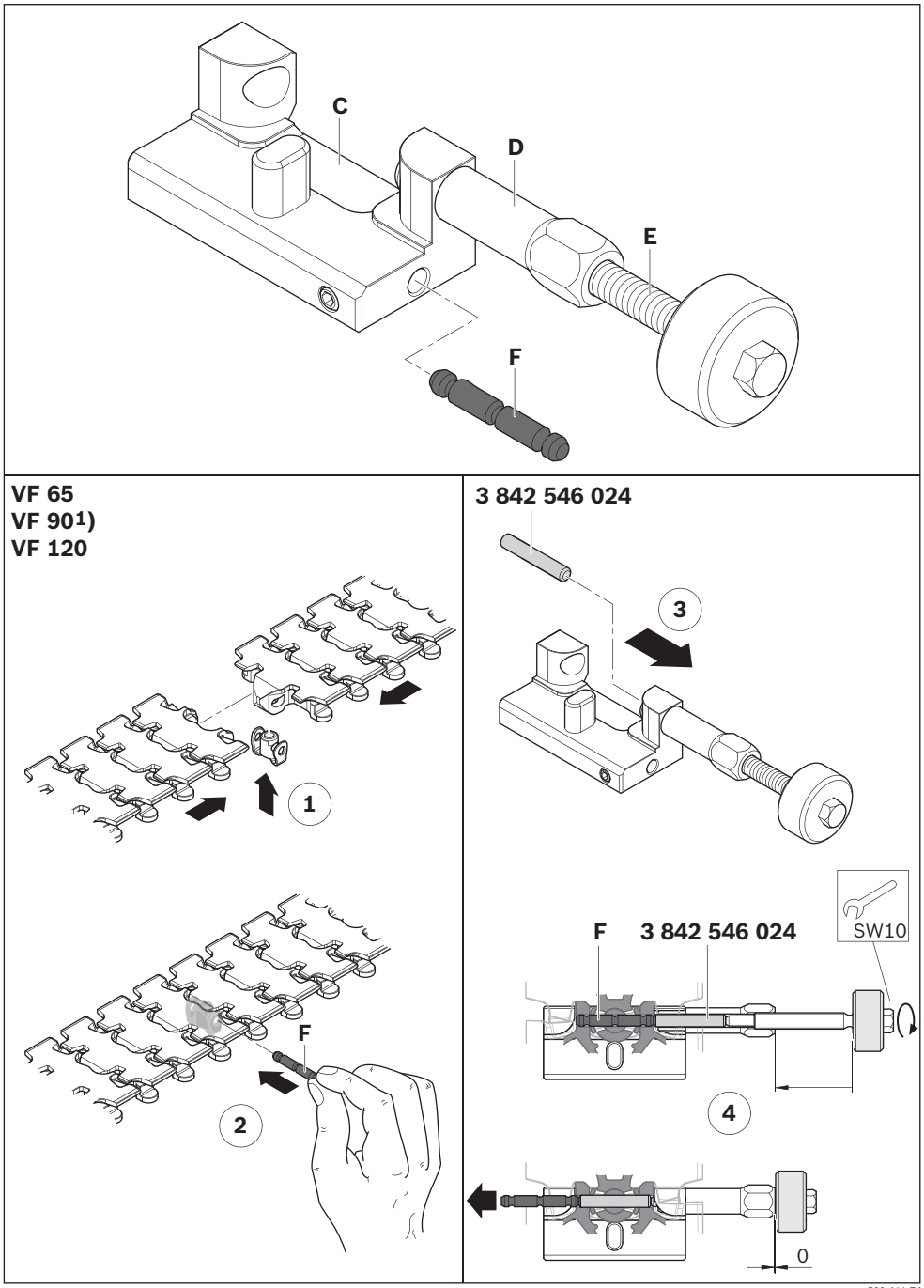

Fig. 74: Closing (extending) conveyor chain, VF 65 / VF 90 / VF 120

ENGLISH

Required tools
- Assembly tool for conveyor chain, **3842 557 025**.

▶ Open (shorten) the conveyor chain (VF 65 / VF 90 / VF 120).

[1]) Size shown

Opening (shortening) conveyor chain, VF 65 / VF 90 / VF 120

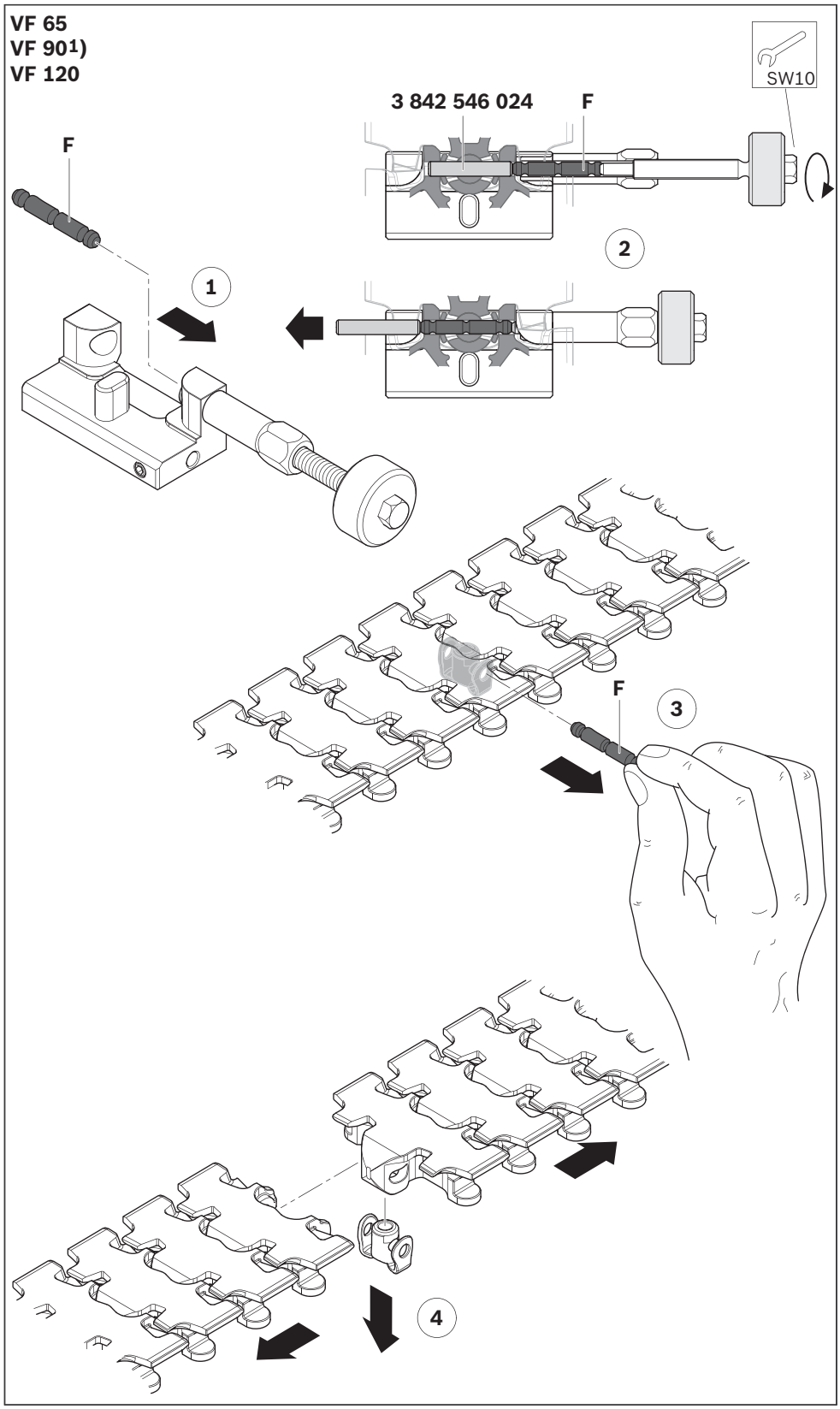

Fig. 75: Opening (shortening) conveyor chain, VF 65 / VF 90 / VF 120

Required accessories
- Screwdriver size 2
- Assembly tool for conveyor chain, **3842 557 025**.

▶ Close (extend) the conveyor chain (VF 160 / VF 240 / VF 320).

[1]) Size shown

Closing (extending) conveyor chain, VF 160 / VF 240 / VF 320

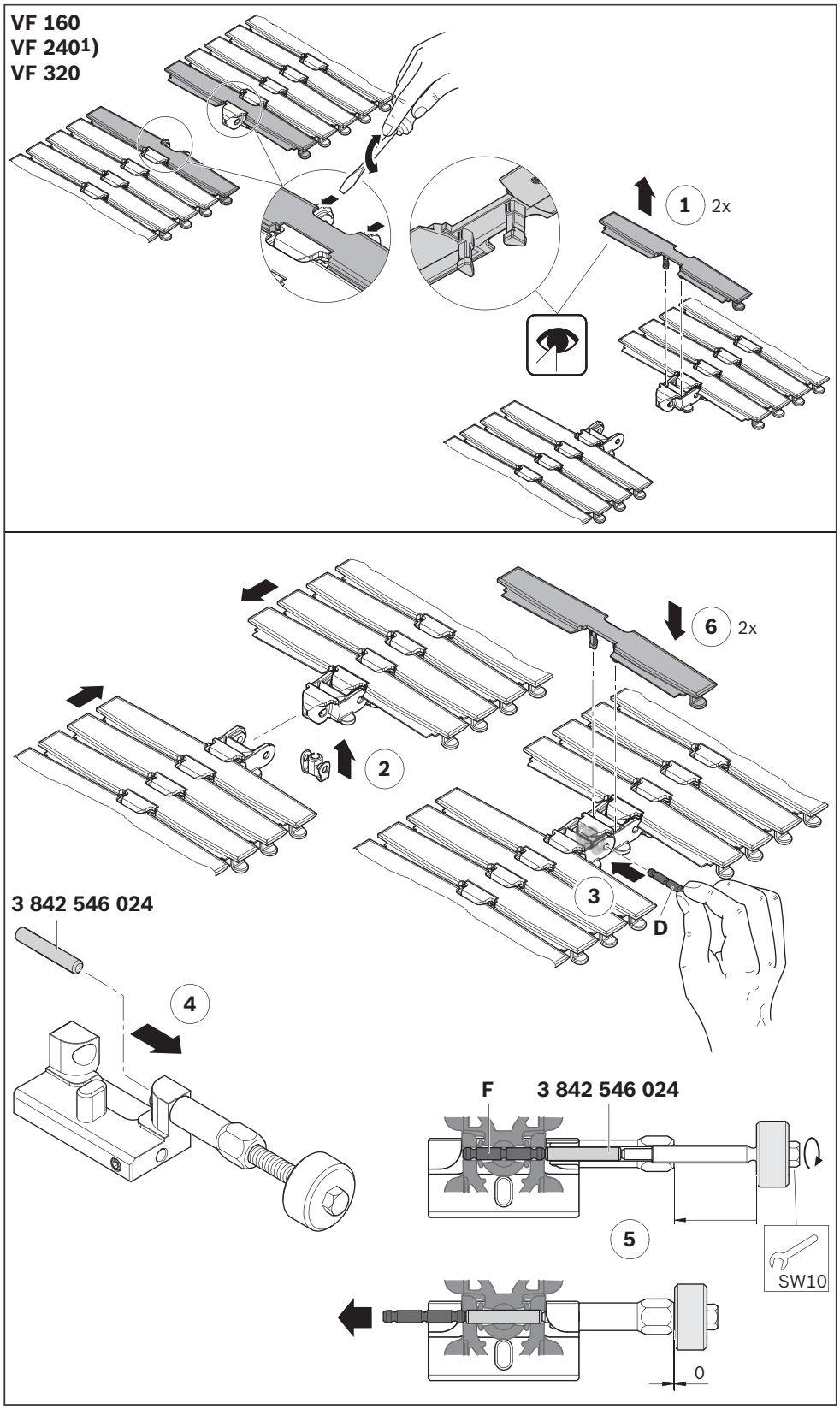

Fig. 76: Closing (extending) conveyor chain, VF 160 / VF 240 / VF 320

ENGLISH

Required tools
- Screwdriver size 2
- Assembly tool for conveyor chain, **3842 557 025**.

1. Open (shorten) the conveyor chain (VF 160 / VF 240 / VF 320).
2. Remove 2 chain plates.

[1]) Size shown

Opening (shortening) conveyor chain, VF 160 / VF 240 / VF 320

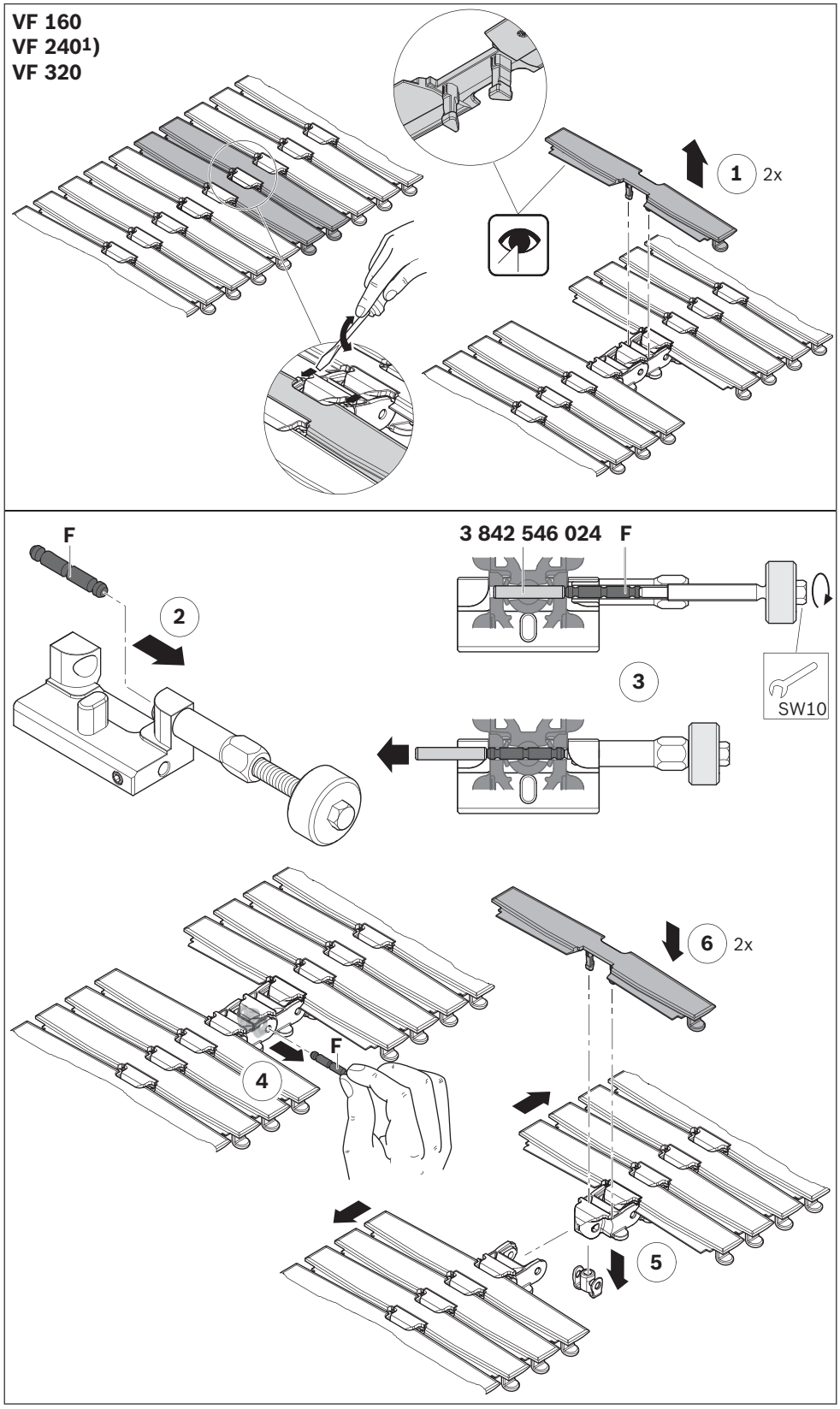

Fig. 77: Opening (shortening) conveyor chain, VF 160 / VF 240 / VF 320

Required accessories
• Roller cleat D35 (G)

G, VF 65-120:	**3842 546 107**
G, VF 160-320:	**3842 553 028**

▶ Install the roller cleat.

Please note:
Remove a few chain links from the conveyor chain (see pages 88 + 90) after a break-in period of approx. 40 hours.

Roller cleat D35

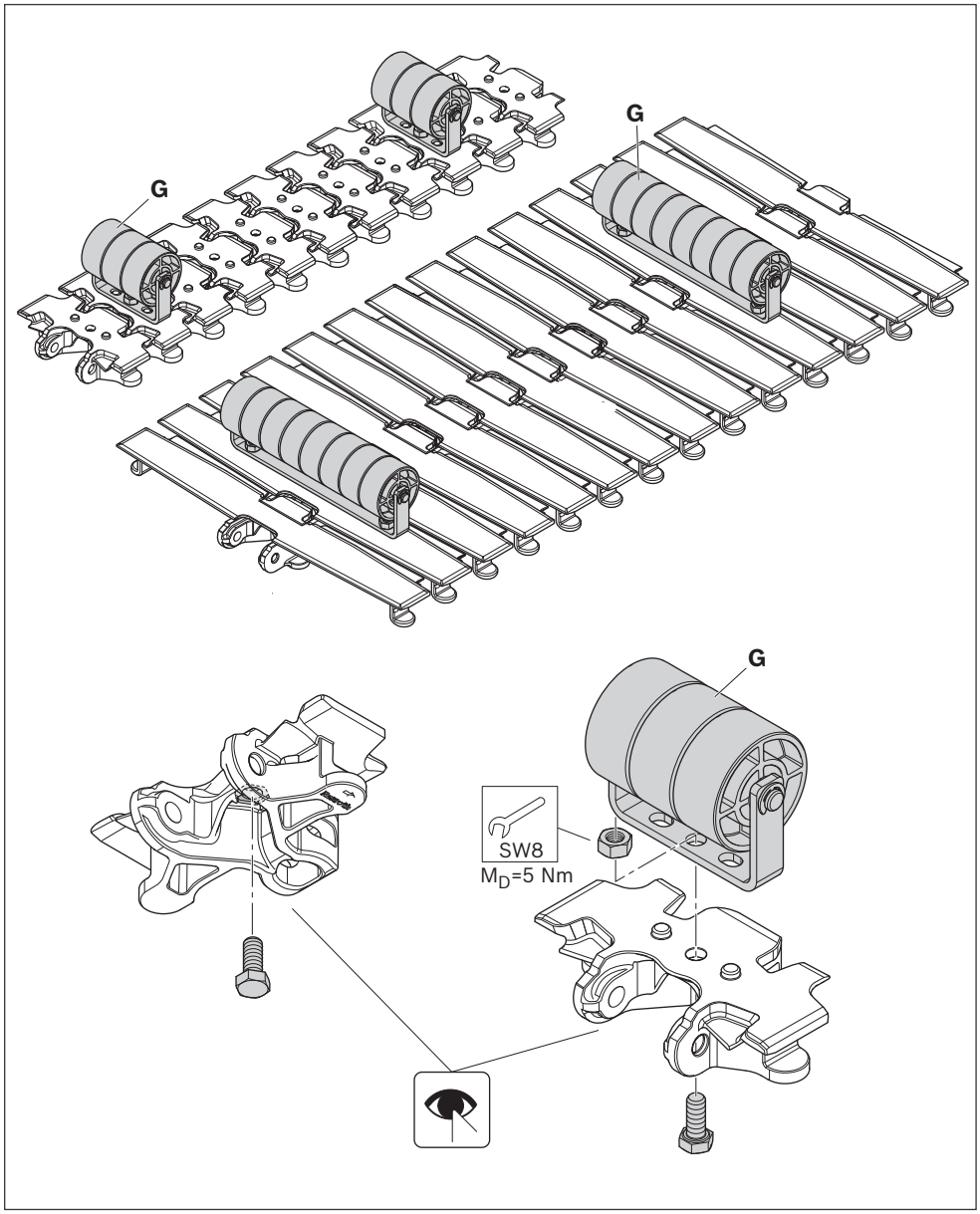

Fig. 78: Installing roller cleat D35 (1/2)

ENGLISH

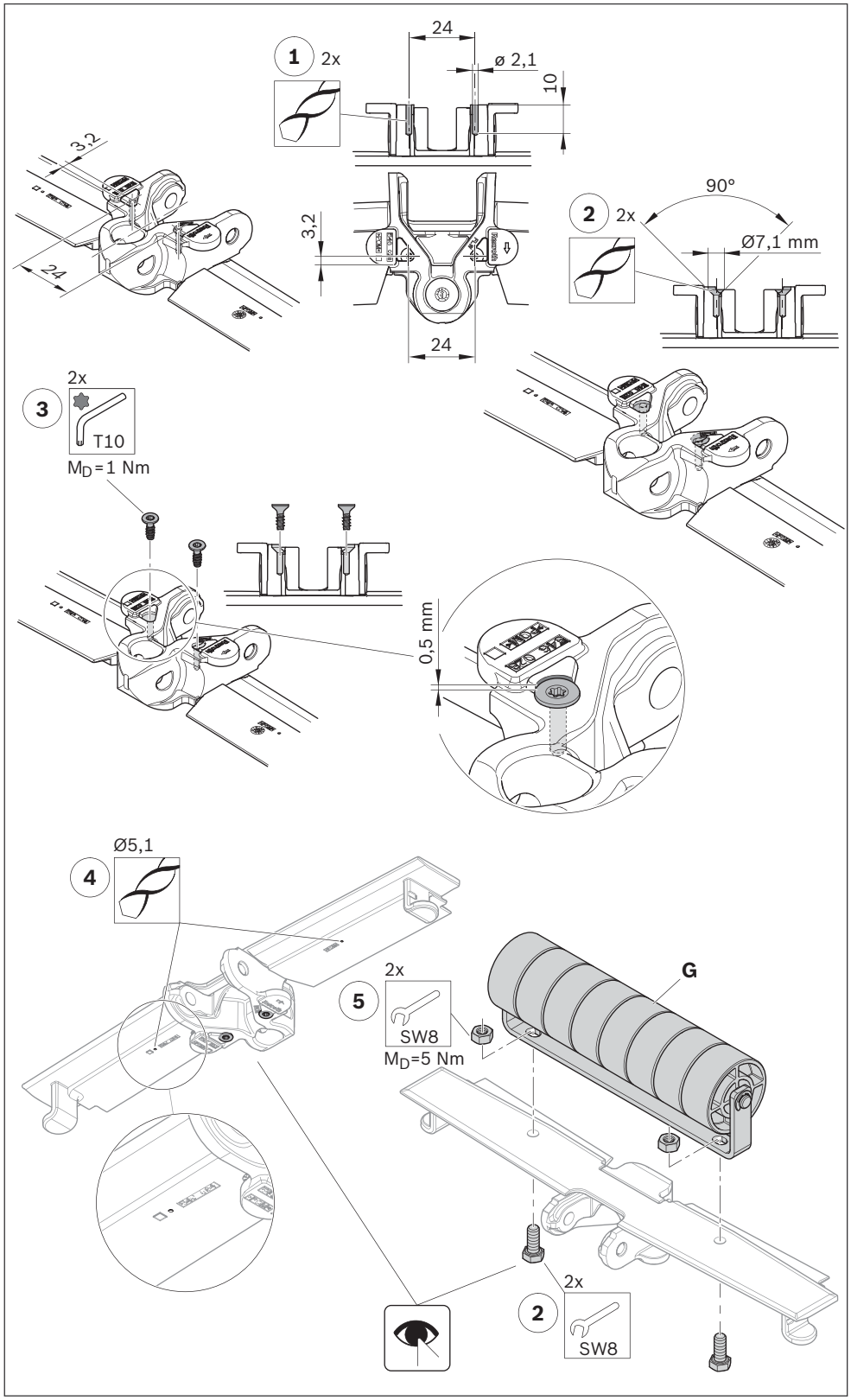

562 411-79

Fig. 79: Installing roller cleat D35 (2/2)

7.5.1 Connection kit

Connection kit passive

Required accessories:
- Connection kit, passive (A)

A, VF 65:	**3842 549 015**
A, VF 90:	**3842 549 016**
A, VF 120:	**3842 549 017**
A, VF 160:	**3842 549 018**

1. Install the side plates (a).

Please note:
The connection kit only functions fault-free if the correct distance between the basic unit and return unit exists and the roller element has the correctly aligned conveyor height (the static friction chain is 2 mm higher than the flat conveyor chain).

[2]) **AL system**: The distance is correct if the centering tab abuts the end of the slot.
[3]) **STS system**: The distance is correct if the side plate abuts the head of the screw.
[4]) **Static friction chain**: The conveyor height is correct if the centering tab abuts the top of the slot.
[5]) **Flat conveyor chain**: The conveyor height is correct if the centering tab rests on the bottom of the slot.

2. Clip the roller element (b) into the side plates.

[1]) Size shown, between basic unit AL and return unit AL

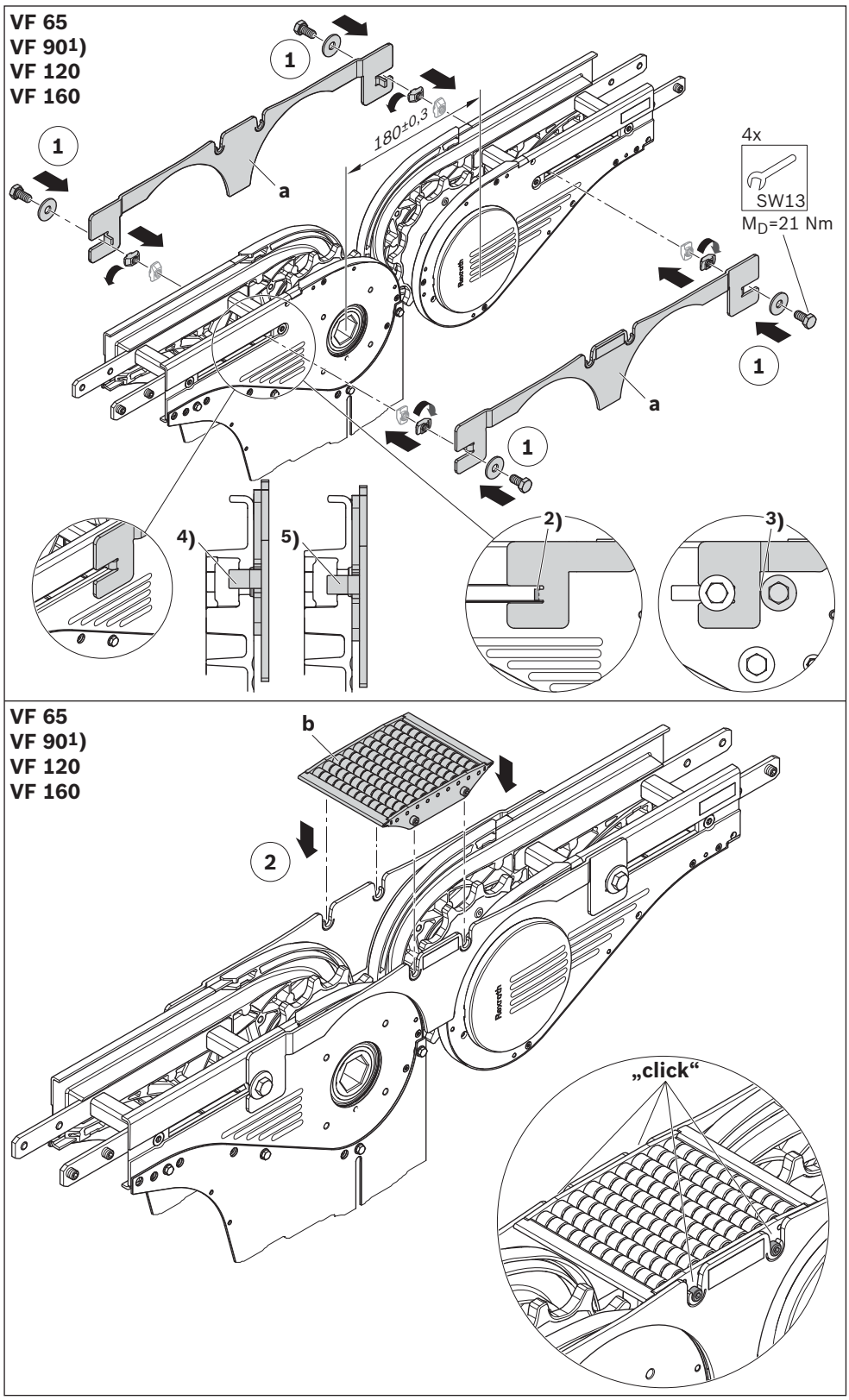

Fig. 80: Installing the passive connection kit

ENGLISH

Required accessories:
- Connection kit short passive bridge:
  - for flat conveyor chain (B)
  - for static friction chain (C)
- Protective cover (optional) (D)

B, VF 65:	**3842 558 050**
B, VF 90:	**3842 558 051**
B, VF 120:	**3842 558 052**
B, VF 160:	**3842 558 070**
C, VF 65:	**3842 558 078**
C, VF 90:	**3842 558 072**
C, VF 120:	**3842 558 080**
C, VF 160:	**3842 558 081**
D, VF 65:	**3842 558 074**
D, VF 90:	**3842 558 075**
D, VF 120:	**3842 558 076**
D, VF 160:	**3842 558 077**

1. Install the connection kit on a basic unit or return unit (steps 1 to 4).
2. Adjust the inclination angle (0°-15°) of the roller element and fix it in place with a screw (step 5).

Please note:
The connection kit only functions fault-free if the correct distance between the basic unit and return unit exists and the roller element has the correctly aligned conveyor height (the static friction chain is 2 mm higher than the flat conveyor chain).

[1]) Size shown, on basic unit AL

Connection kit short passive bridge

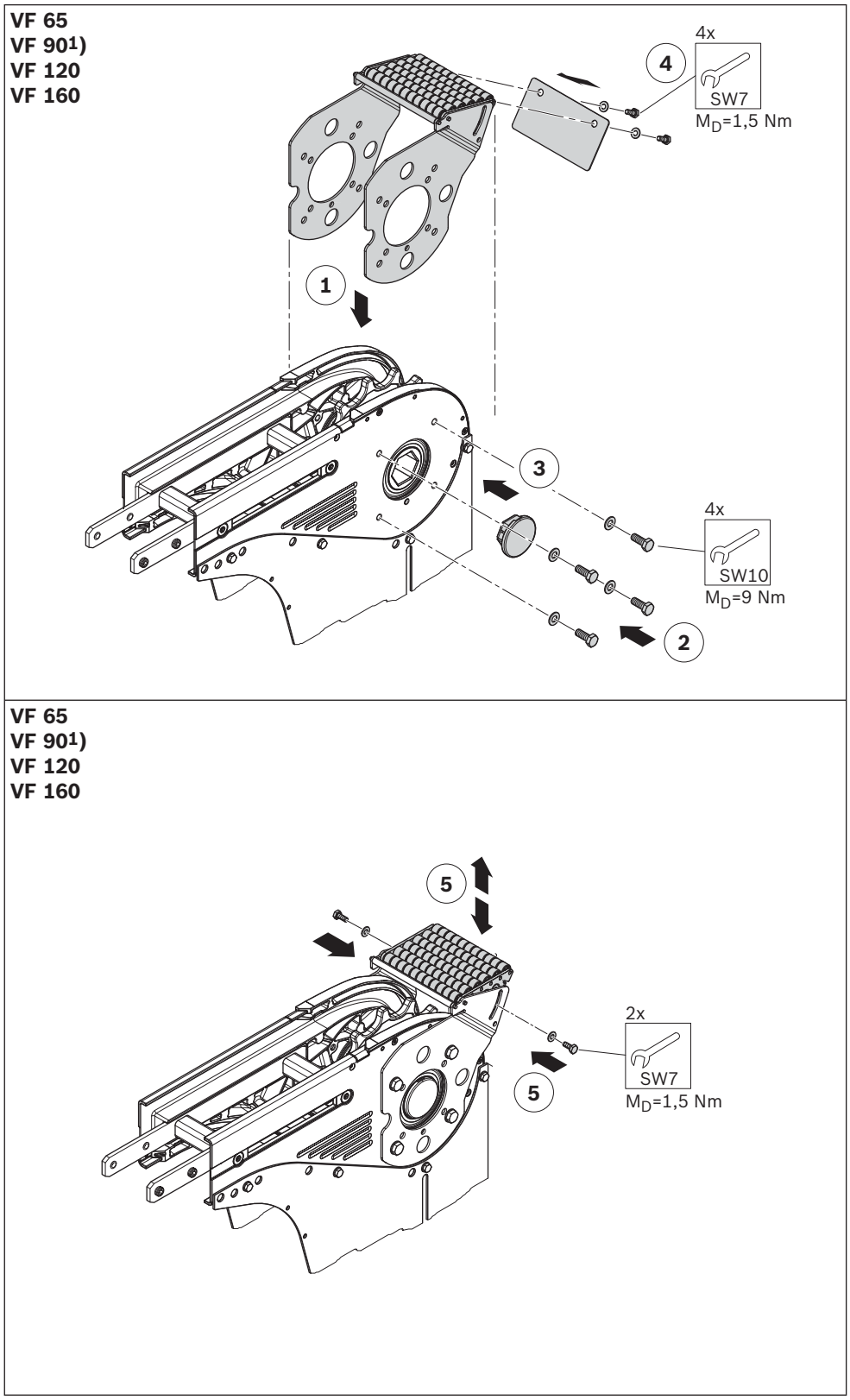

Fig. 81: Installing the passive connection kit

Required accessories:
• Connection kit, active (E)

E, VF 65:	**3842 555 820**
E, VF 90:	**3842 555 821**
E, VF 120:	**3842 555 822**
E, VF 160:	**3842 555 823**

1. Only if required: Remove the cover cap (c).
2. Install the adapter plates (d).
3. Install the roller element (e).

Please note:
The connection kit only functions fault-free if the correct distance between the basic unit and return unit exists and the roller element has the correctly aligned conveyor height (the static friction chain is 2 mm higher than the flat conveyor chain).

▶ Align the conveyor height of the roller element (with the aid of two pieces of chain on both sides of the roller element).

[1]) Size shown, between basic unit AL and return unit AL

Connection kit active

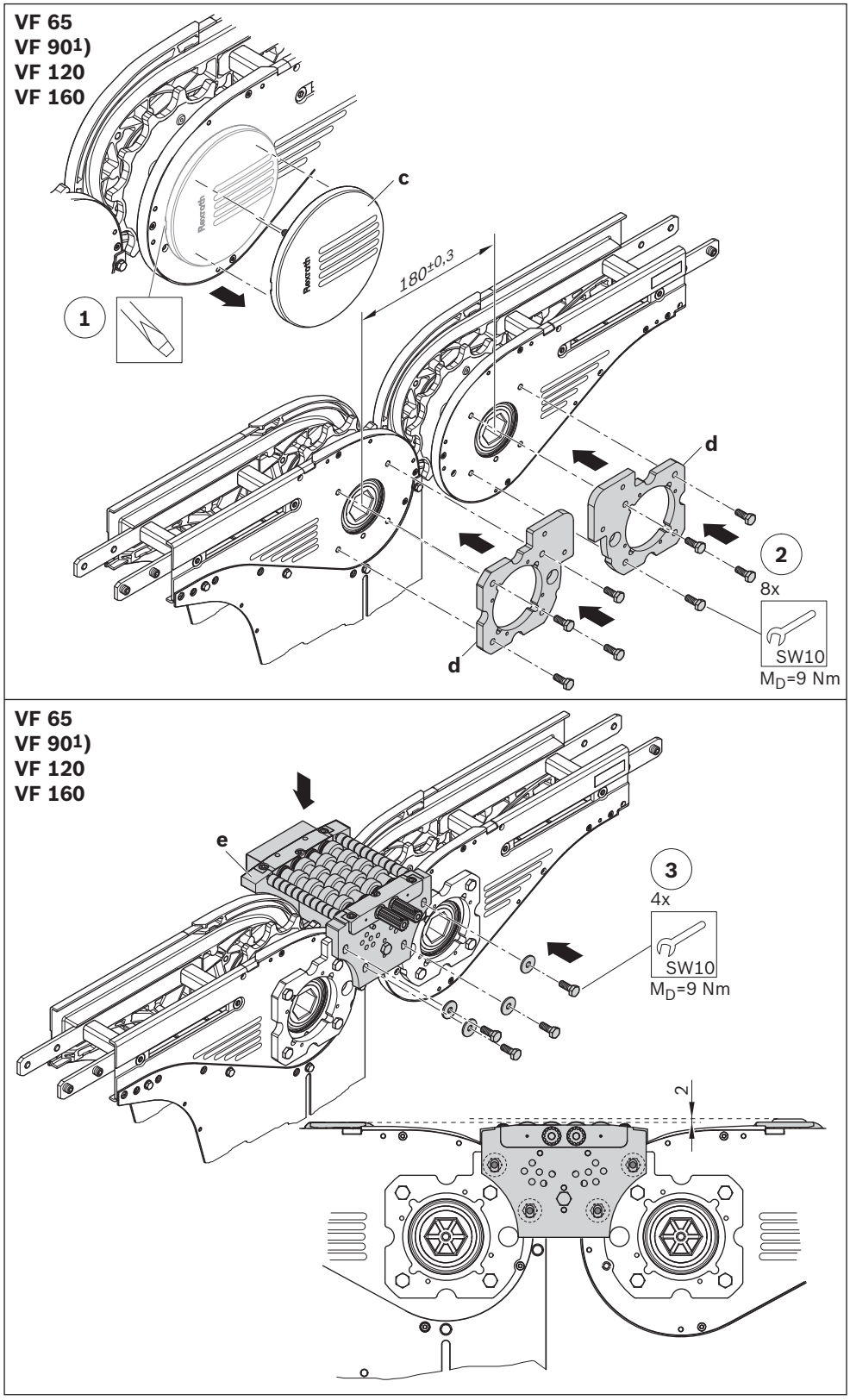

Fig. 82: Installing the active connection kit (1/4)

ENGLISH

Active connection kit

4. Install the slide rail and conveyor chain before installing the drive of the connection kit.

[1]) Size shown

Connection drive to bridge the conveyor trench

[2]) The Machinery Directive 2006/42/EC requirement for captive screws on protective covers is fulfilled if this locking washer (x) is fitted.

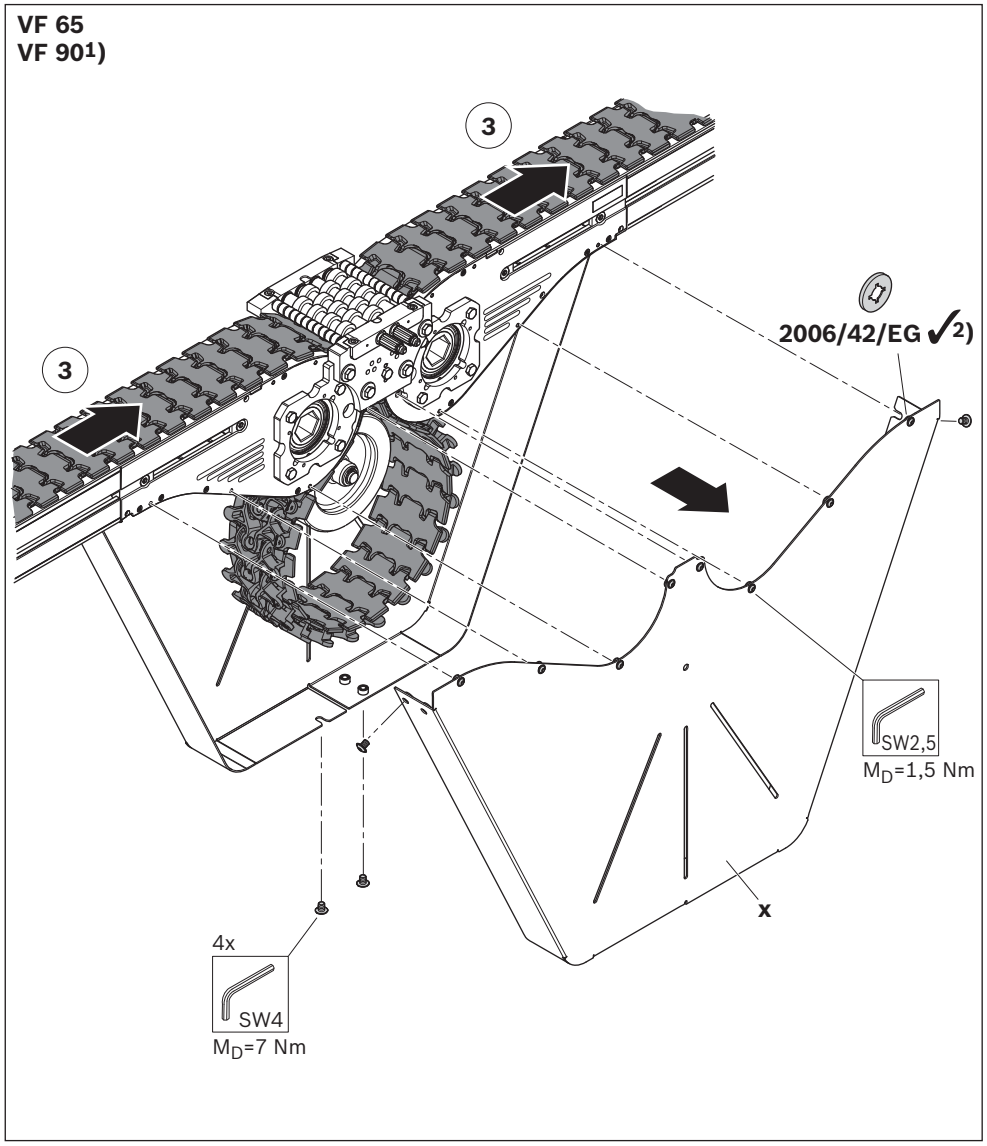

Fig. 83: Installing the connection drive (2/4)

5. Install the toothed belt sprocket (f).

Please note:
You should preferably install the toothed belt sprocket on the basic unit (drive).

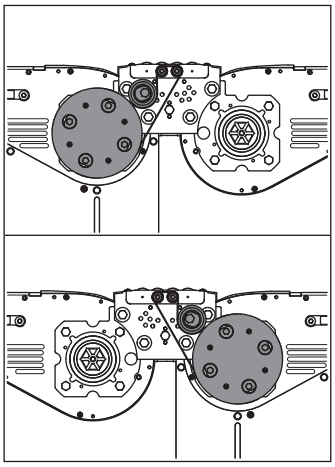

Fig. 84: Toothed belt sprocket position

6. Install the toothed belt (g).
7. Install the tensioner pulley (h) and tighten the toothed belt.

[1]) Size shown, between basic unit AL and return unit AL
[2]) It is possible to place the tensioner pulley in different positions, depending on the length of the toothed belt.

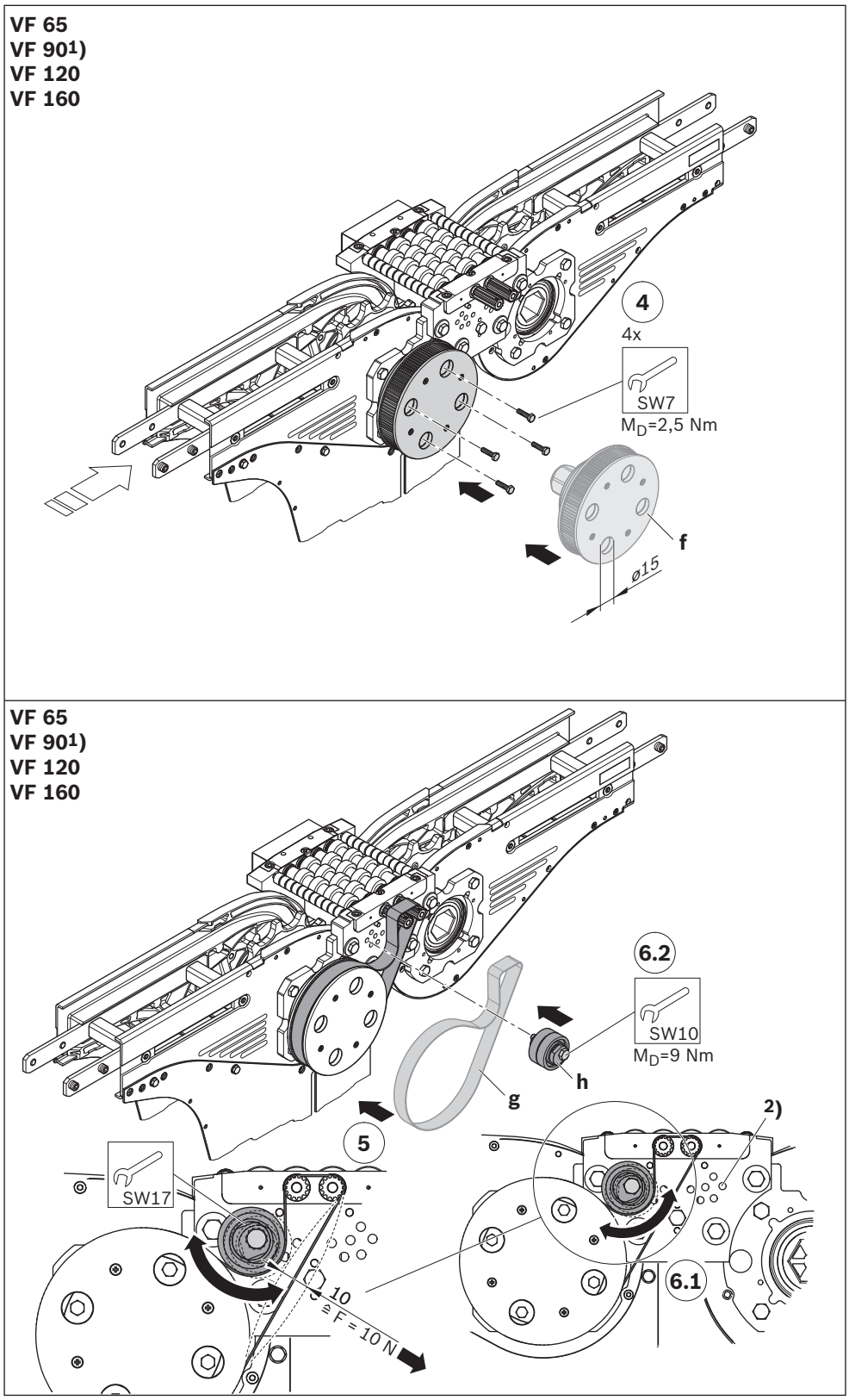

Fig. 85: Installing the active connection kit (3/4)

ENGLISH

8. Install the protective cover of the drive (j).
9. Install the cover sheet (k).

[1]) Size shown, between basic unit AL and return unit AL

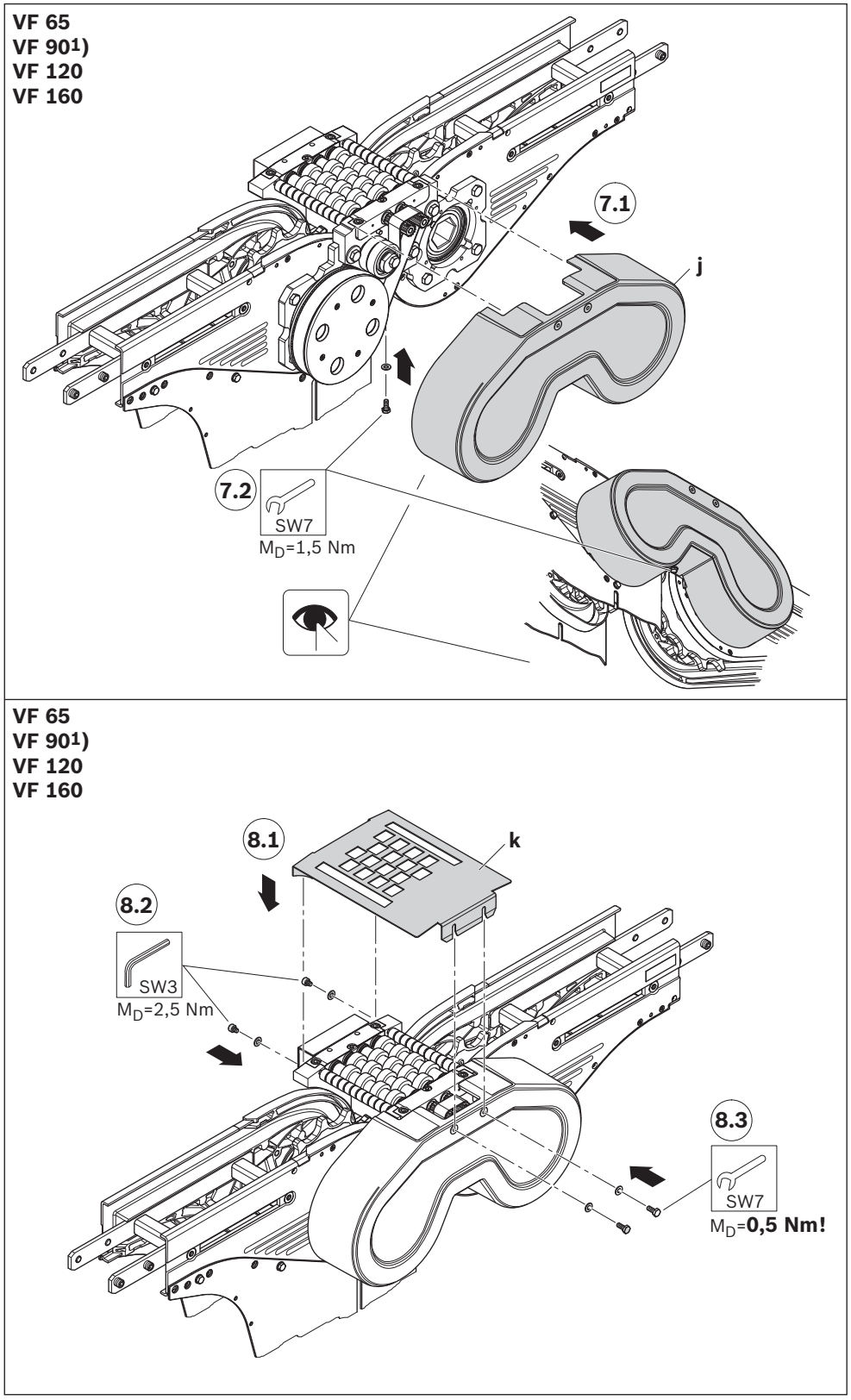

Fig. 86: Installing the active connection kit (4/4)

Required accessories:
- Connection kit, active, machine connection (F)

F, VF 65:	**3841 055 718** (R)	
	3841 055 719 (L)	
F, VF 90:	**3841 055 720** (R)	
	3841 055 721 (L)	
F, VF 120:	**3841 055 722** (R)	
	3841 055 723 (L)	
F, VF 160:	**3841 055 724** (R)	
	3841 055 725 (L)	

1. Only if required: Remove the cover cap (c).
2. Install the adapter plate (d).
3. Install the roller element (e).

Please note:
The connection kit only functions fault-free if the roller element has the correctly aligned conveyor height (the static friction chain is 2 mm higher than the flat conveyor chain).

▶ Align the conveyor height of the roller element (with the aid of two pieces of chain).

[1]) Size shown, right-hand installation position (R)

Active connection kit, machine connection

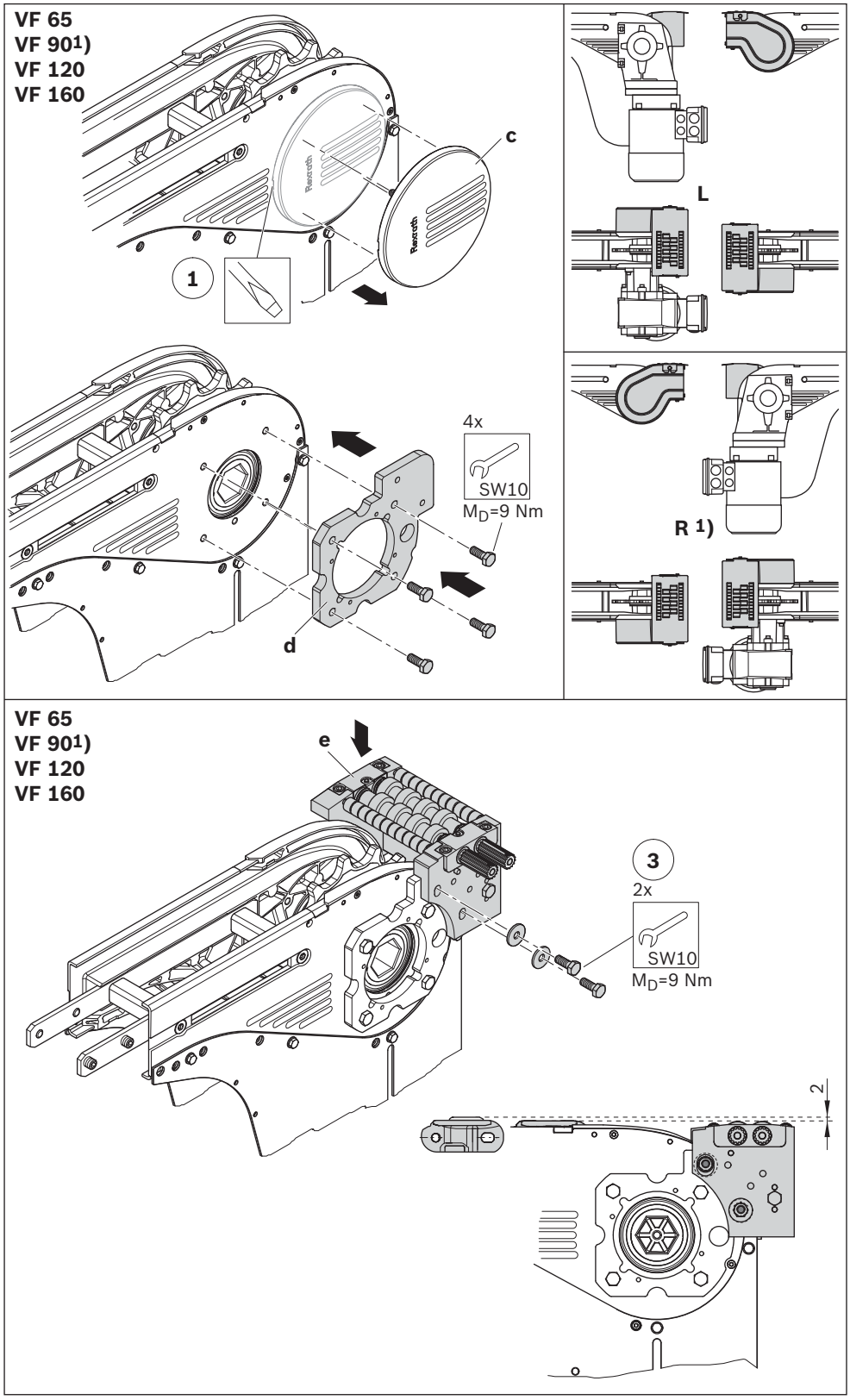

Fig. 87: Installing the active connection kit, machine connection (1/3)

4. Install the toothed belt sprocket (f).

Please note:
You should preferably install the toothed belt sprocket on the basic unit (drive).

5. Install the toothed belt (g).
6. Install the tensioner pulley (h).

[1]) Size shown

[2]) It is possible to place the tensioner pulley in different positions, depending on the length of the toothed belt.

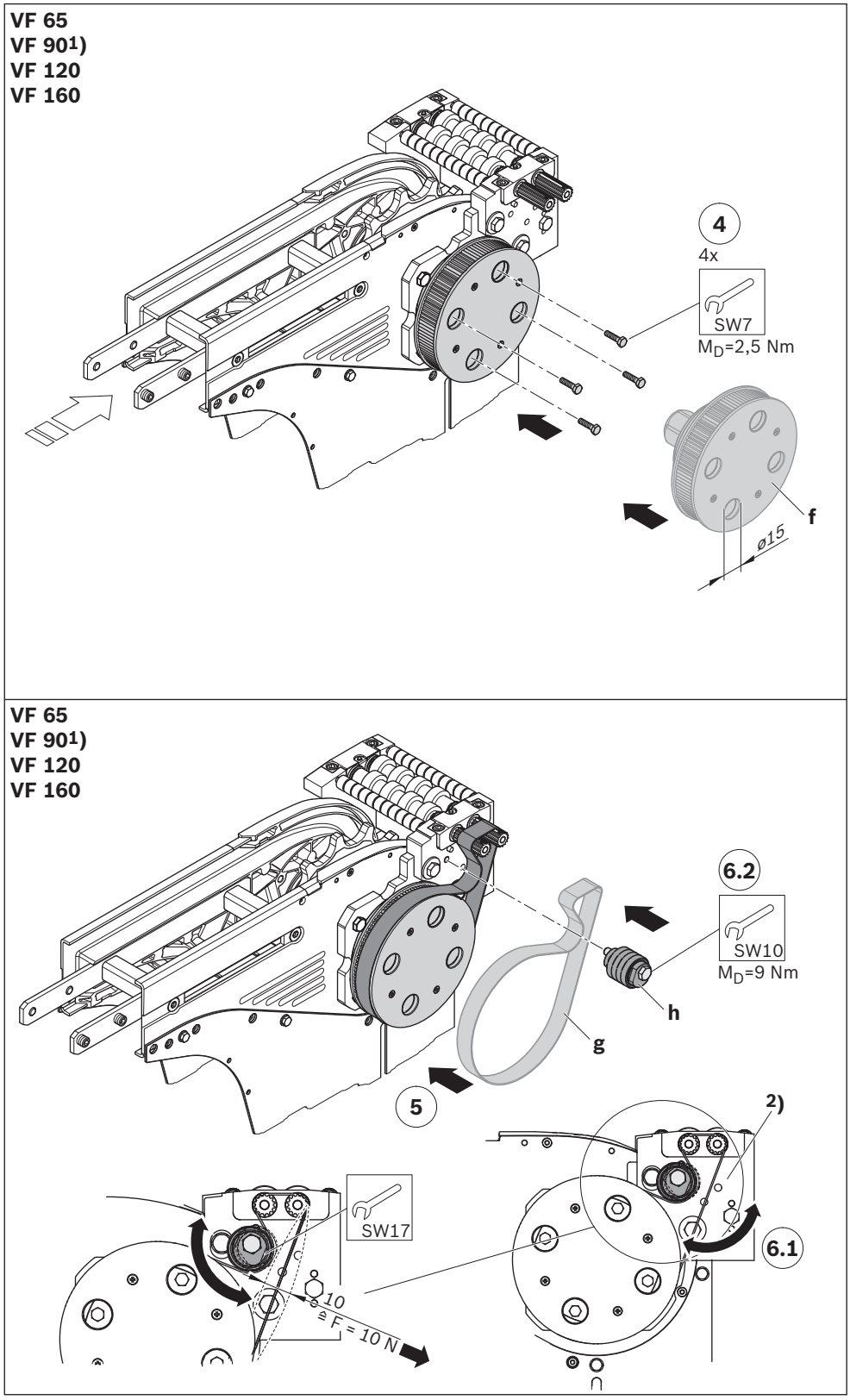

Fig. 88: Installing the active connection kit, machine connection (2/3)

7. Install the protective cover of the drive (j) and the rear cover (k).
8. Install the protective cover of the roller element (l).

[1]) Size shown

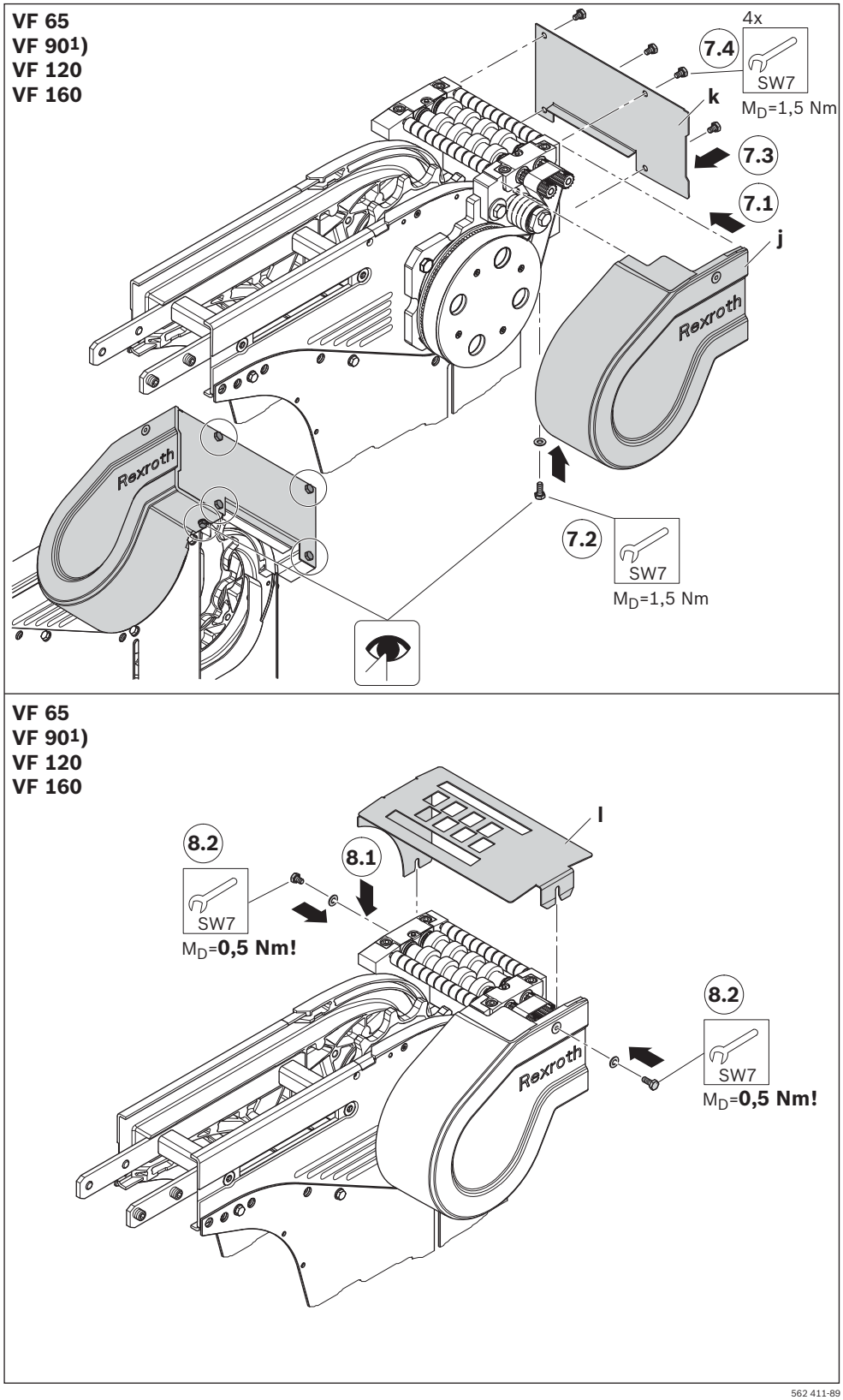

562 411-89

Fig. 89: Installing the active connection kit, machine connection (3/3) lateral guide

ENGLISH

Required accessories:
- Active connection kit belt (G)

G, VF 65,
left: **3841 558 000**
right: **3841 558 001**

G, VF 90:
left **3841 558 002**
right: **3841 558 003**

1. Only if required: Remove the cover cap (a).
2. Install the adapter plate (b) with washer (c).
3. Install the protective profile (d).
4. Install the belt element (e).

Please note:
The connection kit only functions fault-free if the belt bridge has the correctly aligned conveyor height (the static friction chain is 2 mm higher than the flat conveyor chain).

Note:
- ▶ Install additional plates on the static friction chain.

[1]) Size shown, left-hand installation position (L), flat conveyor chain
[2]) **without** spacer plates when operating with a flat conveyor chain
[3]) **with** spacer plates (included in the scope of delivery) when operating with a static friction chain

Active connection kit belt (belt bridge)

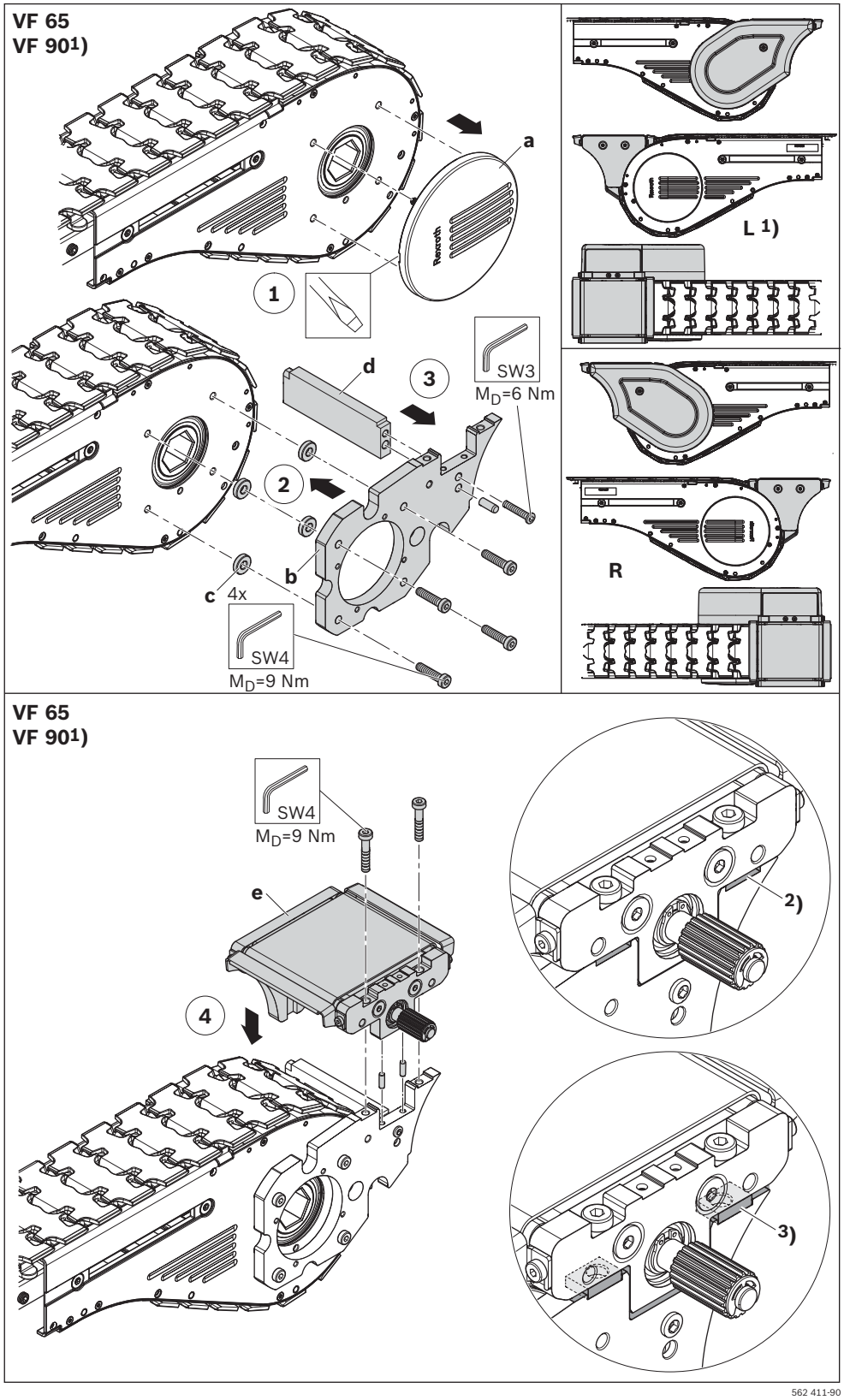

Fig. 90: Installing the active connection kit belt (belt bridge) (1/4)

5. Install the toothed belt sprocket (f)
6. Install the toothed belt (g)
7. Install the tensioner pulley (h).

Please note:
The position of the eccentric is different for the flat conveyor chain and static friction chain.
In the static friction chain, the eccentric is not fully tensioned.

[1]) Size shown, left-hand installation position (L), flat conveyor chain

[2]) Eccentric position: flat conveyor chain
[3]) Eccentric position: static friction chain

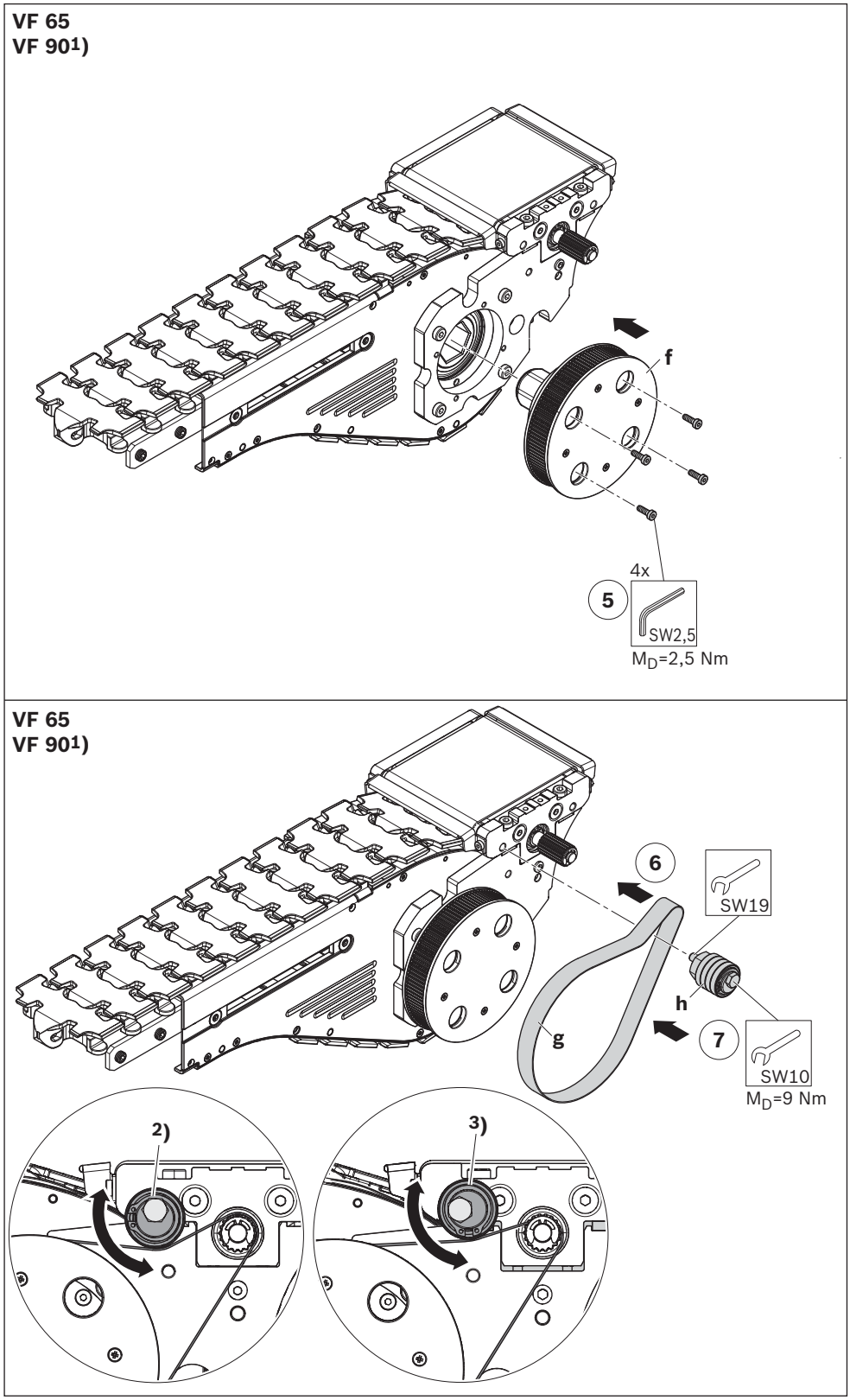

Fig. 91: Installing the active connection kit belt (belt bridge) (2/4)

8. Install the protective cover (i) of the drive.
9. Install the cover sheet (j).

[1]) Size shown, left-hand installation position (L), flat conveyor chain

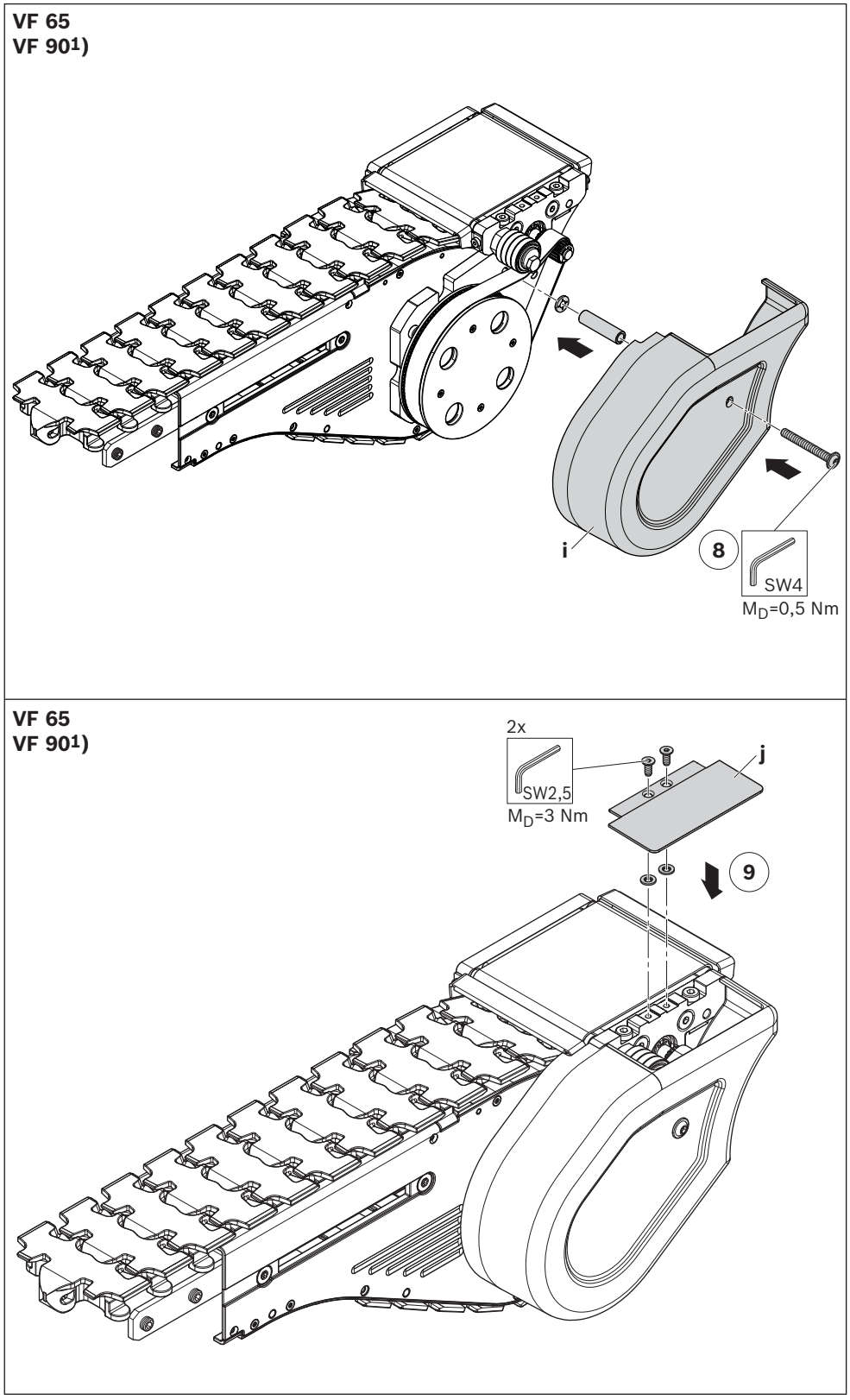

Fig. 92: Installing the active connection kit belt (belt bridge) (3/4)

Please note:
The transfer element (k) is only required if another VarioFlow *plus* unit is connected to the belt bridge.

[1]) Size shown, left-hand installation position (L), flat conveyor chain

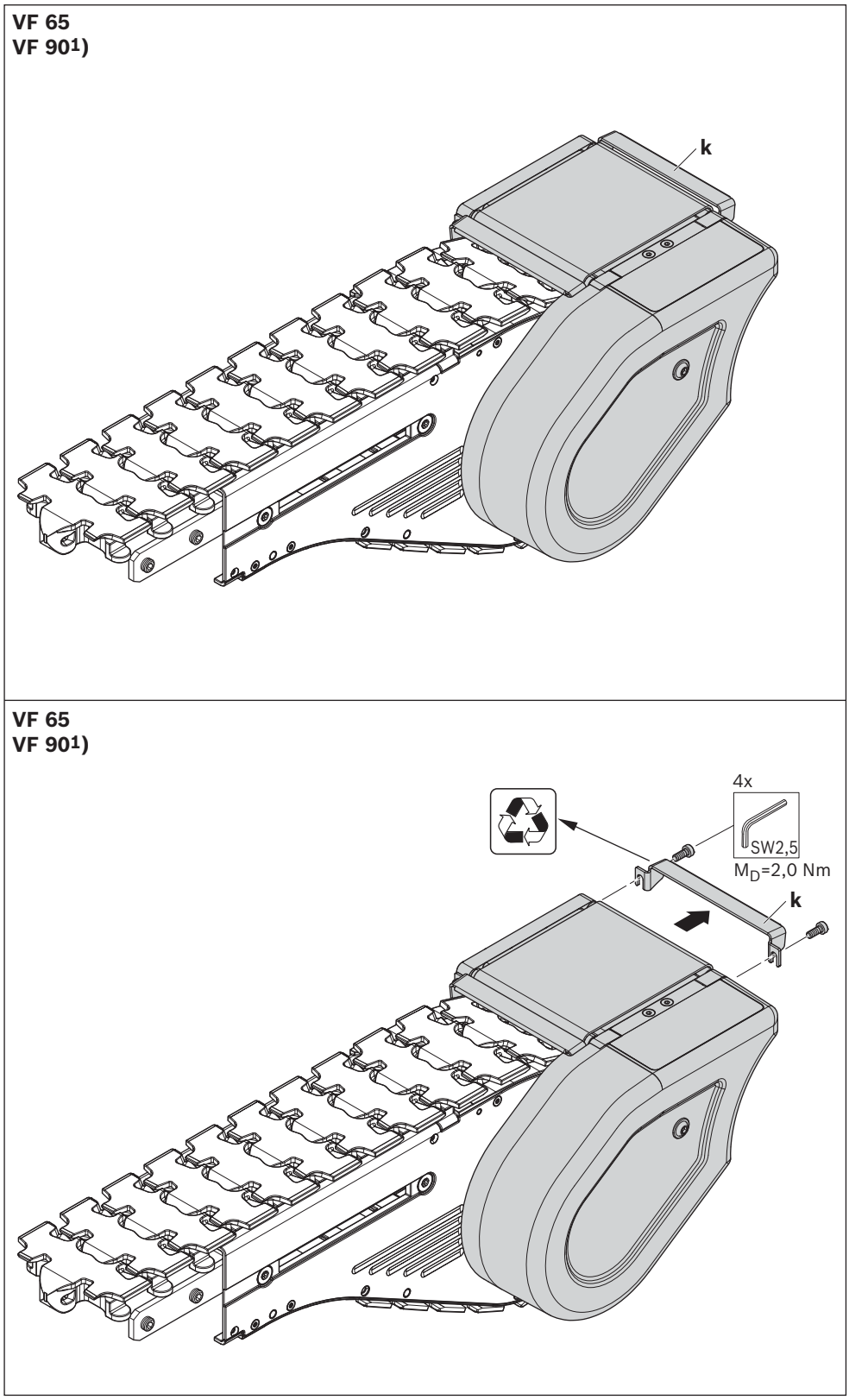

Fig. 93: Installing the active connection kit belt (belt bridge) (4/4)

Above with transfer element
Below the transfer element is removed

7.5.2 Lateral guide

Installing the lateral guide

▶ Install the lateral guide.

[1]) Size shown

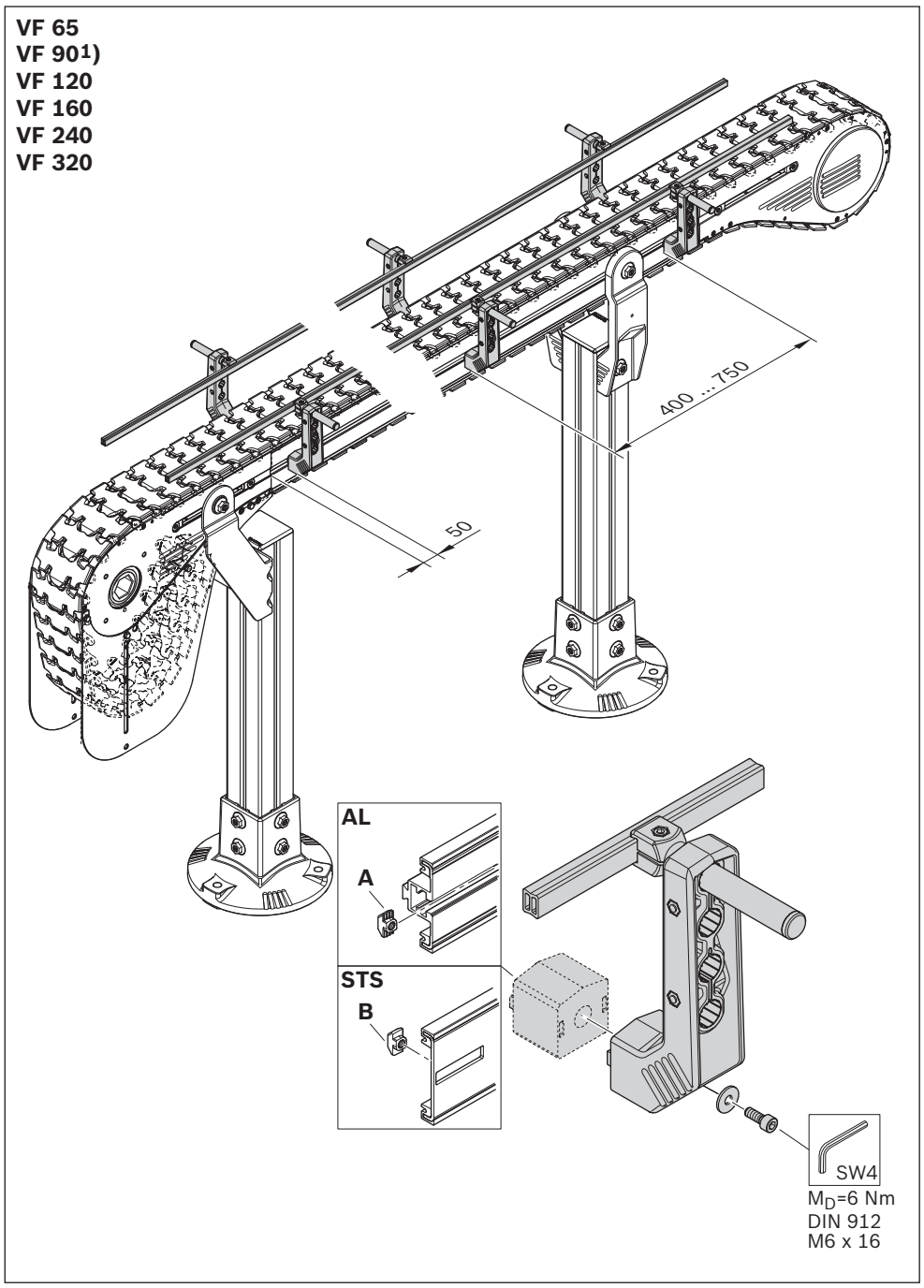

Fig. 94: Installing the lateral guide

Lateral guide accessories

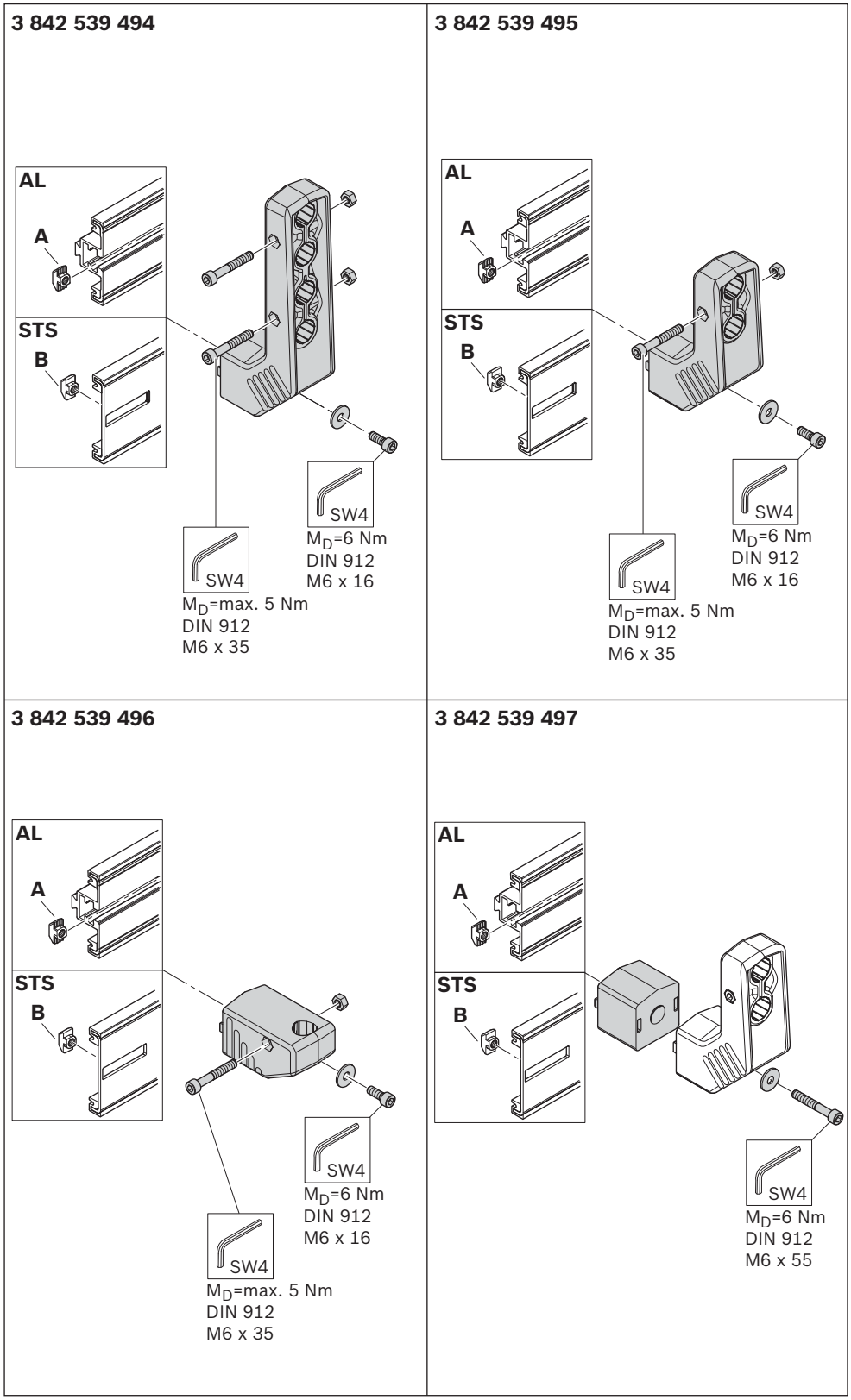

Fig. 95: Lateral guide accessories (1/4)

ENGLISH

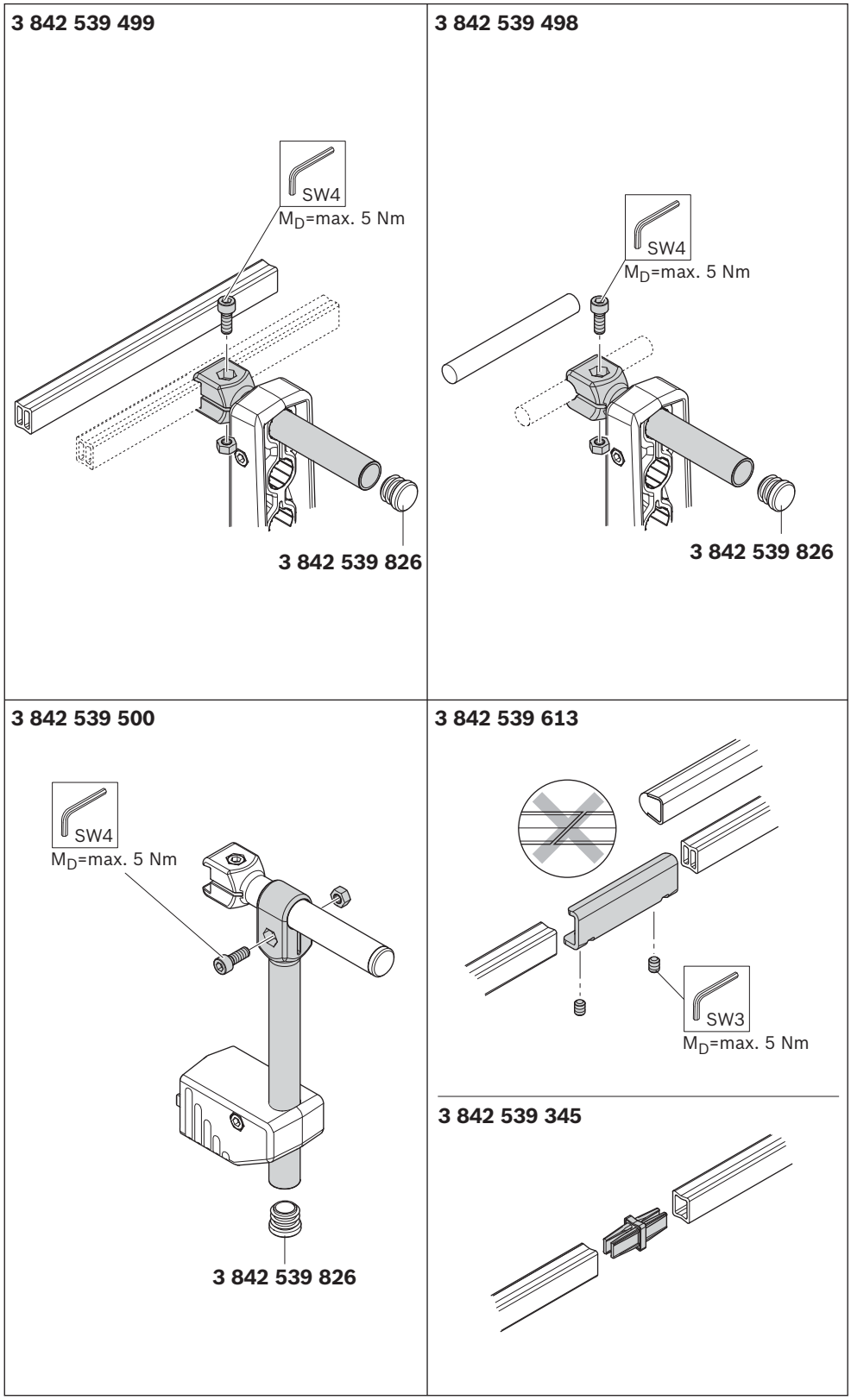

Fig. 96: Lateral guide accessories (2/4)

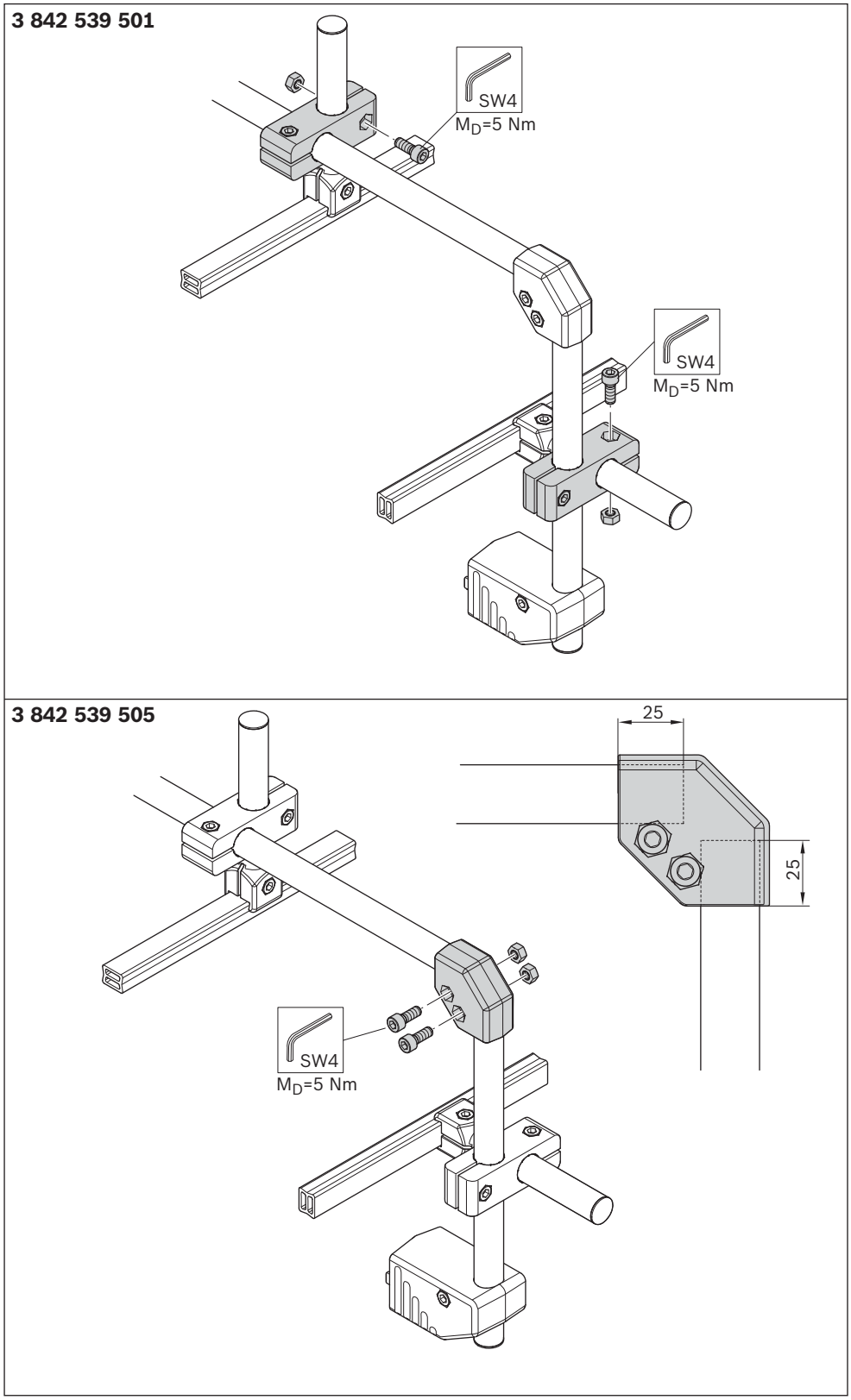

Fig. 97: Lateral guide accessories (3/4)

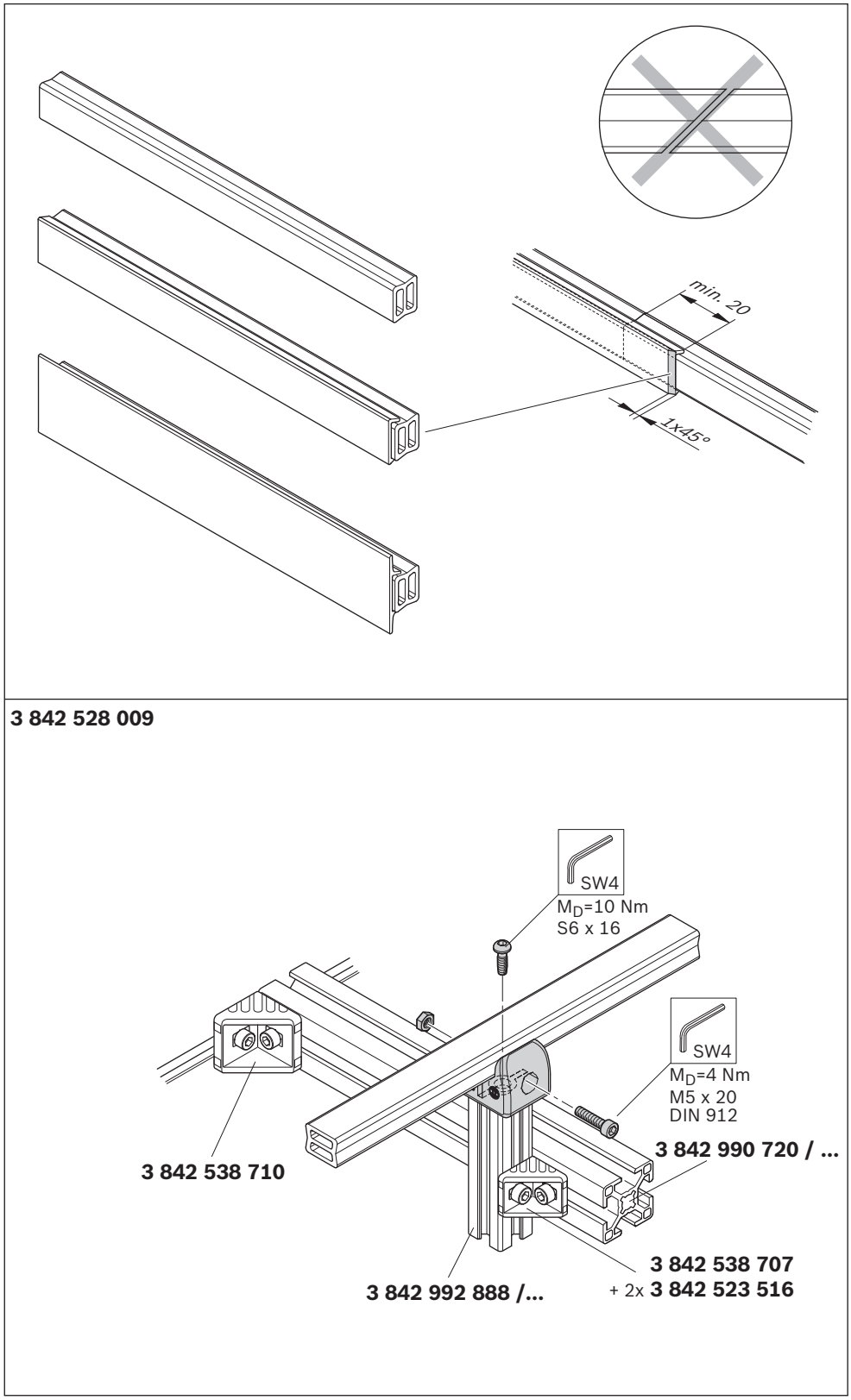

Fig. 98: Lateral guide accessories (4/4)

Required accessories:

- Adjustment unit (A)
- Assembly kit (B)

A: 3842 547 707

B: 3842 547 718

▶ Install the adjustable lateral guide.

Adjustable lateral guide

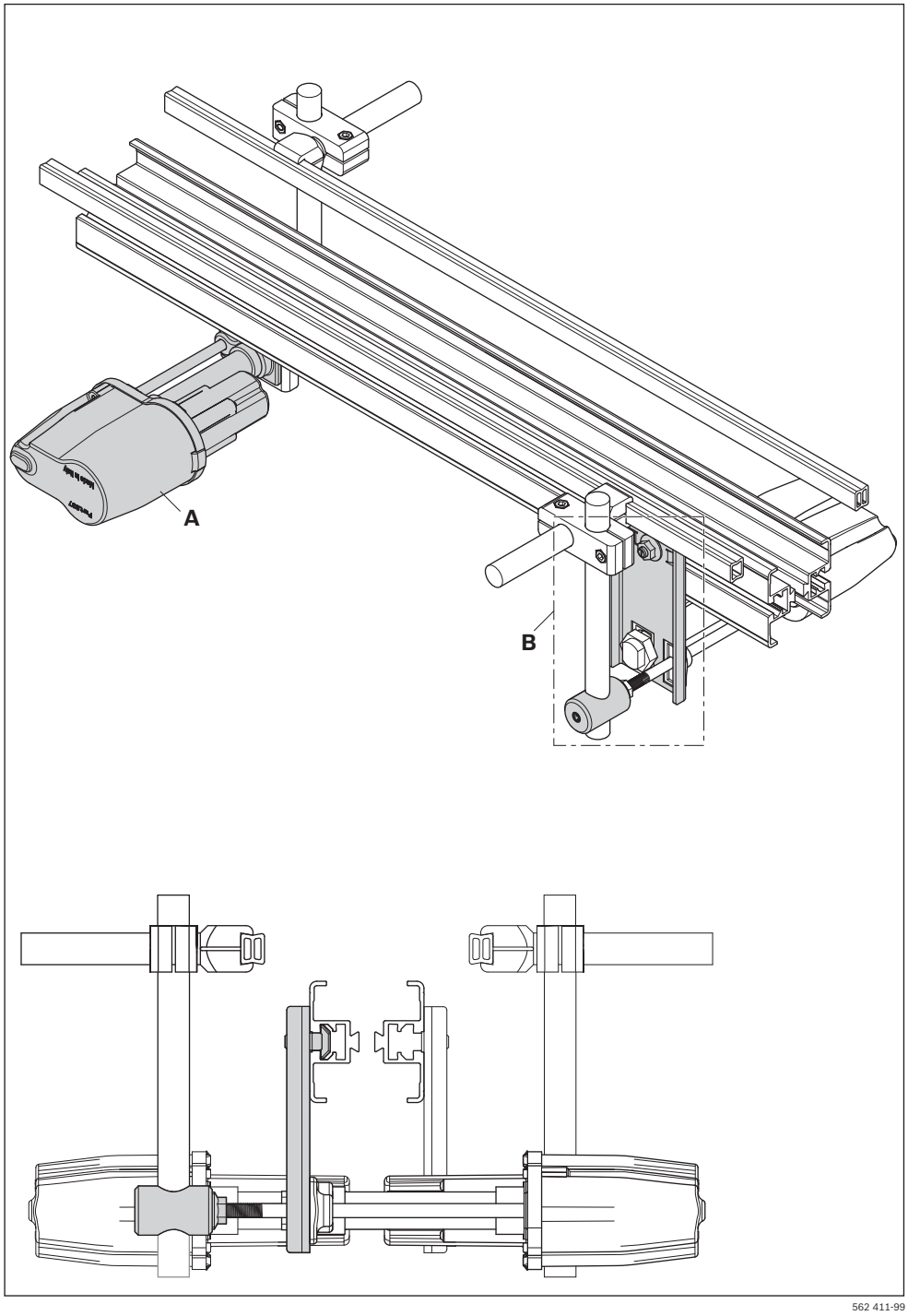

Fig. 99: Lateral guide: adjustable lateral guide (1/4)

ENGLISH

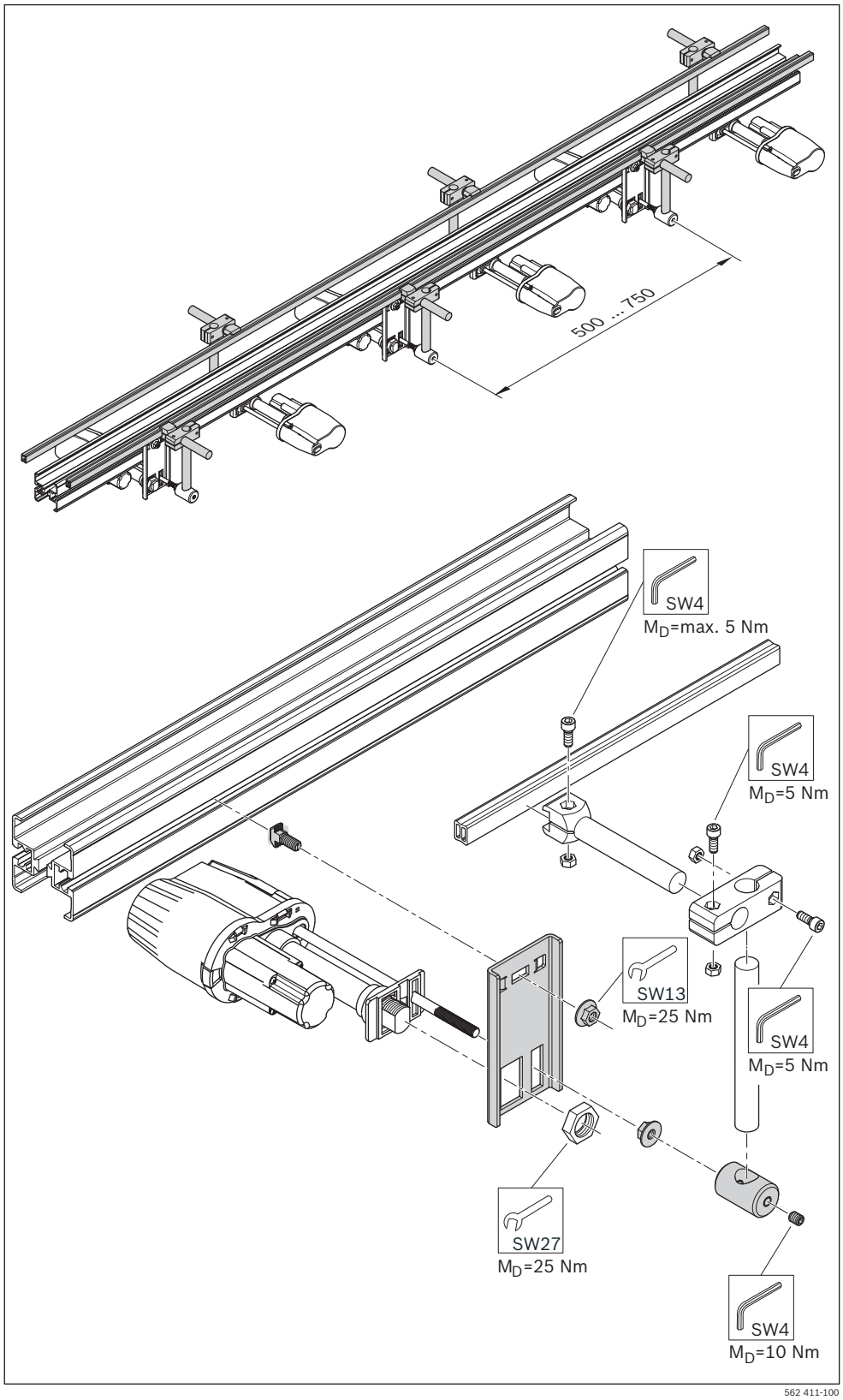

Fig. 100: Lateral guide: adjustable lateral guide (2/4)

Adjustment range, function
With each pressure pulse, the adjustment unit switches by 2 mm. After 16 switching operations the adjustment unit returns to its initial position.

Pneumatic diagram (see page 114)
Centered adjustment (A).
Separate side adjustment (B).

Please note:
Switch a maximum of 8 adjustment units in series

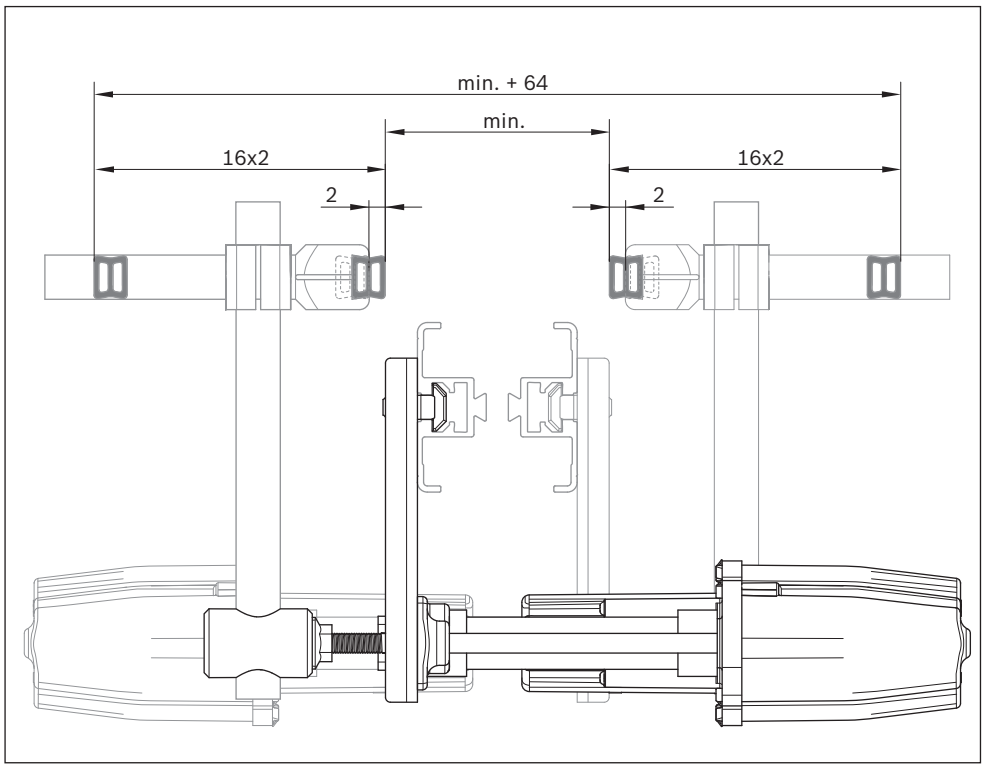

Fig. 101: Lateral guide: adjustable lateral guide (3/4)

ENGLISH

Pneumatics
- Oiled or non-oiled, filtered, dry compressed air.
- Operating pressure: 4 to 5 bar

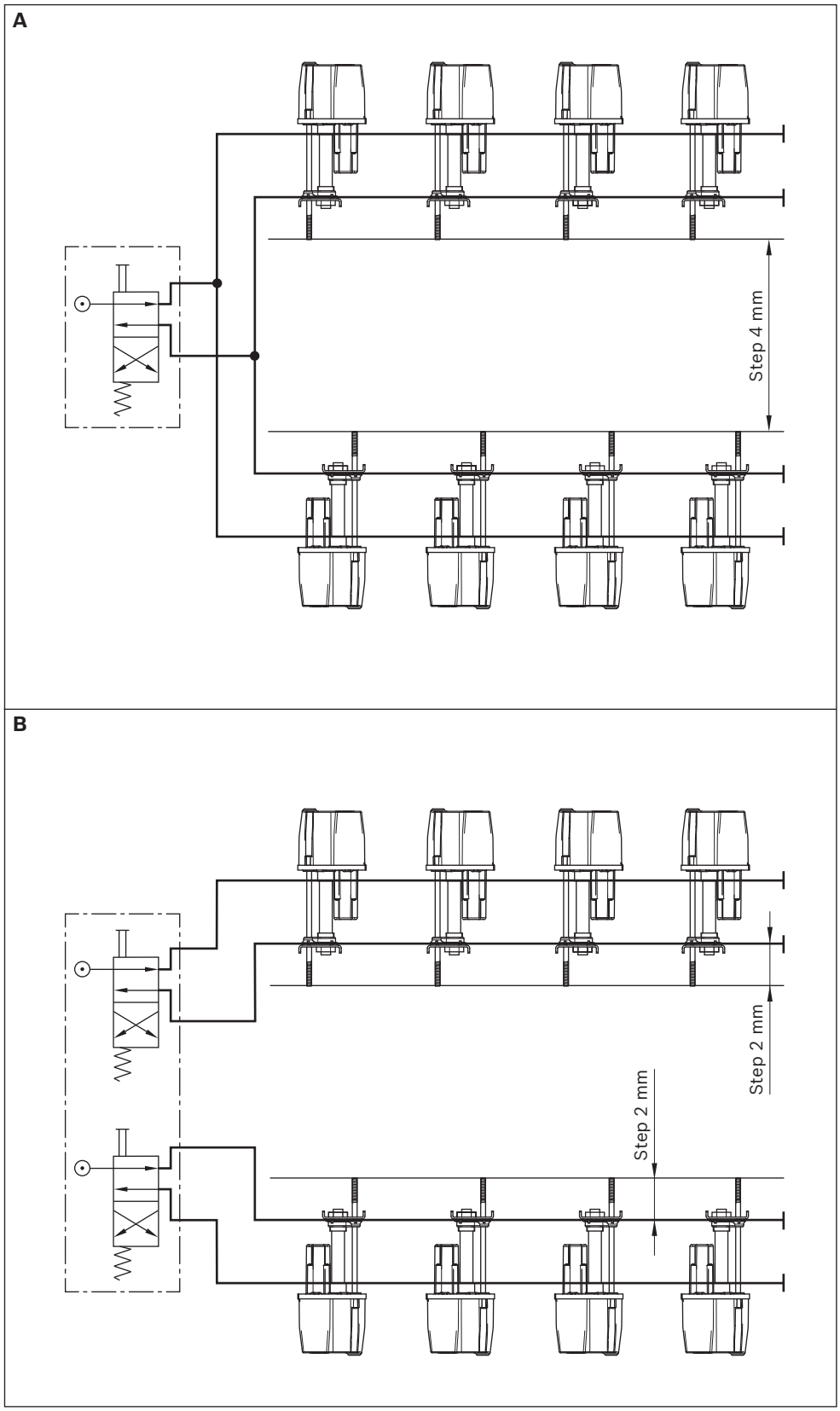

Fig. 102: Lateral guide: adjustable lateral guide (4/4)

VarioFlow *plus* flow control barrier

Required accessories:
• VarioFlow *plus* flow control barrier (C)

C: 3842 553 070

▶ Install the barrier.

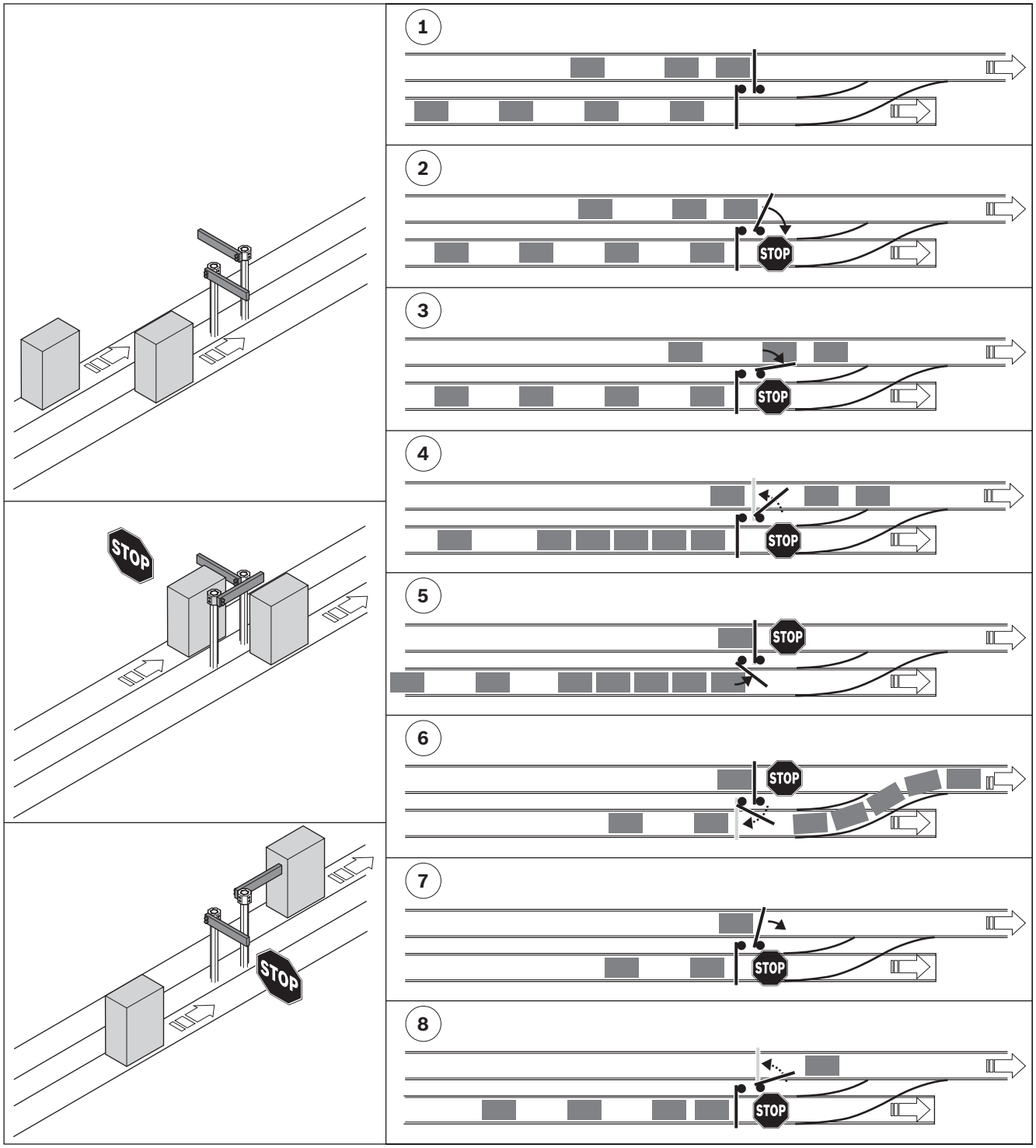

Fig. 103: Lateral guide: barrier (1/4)

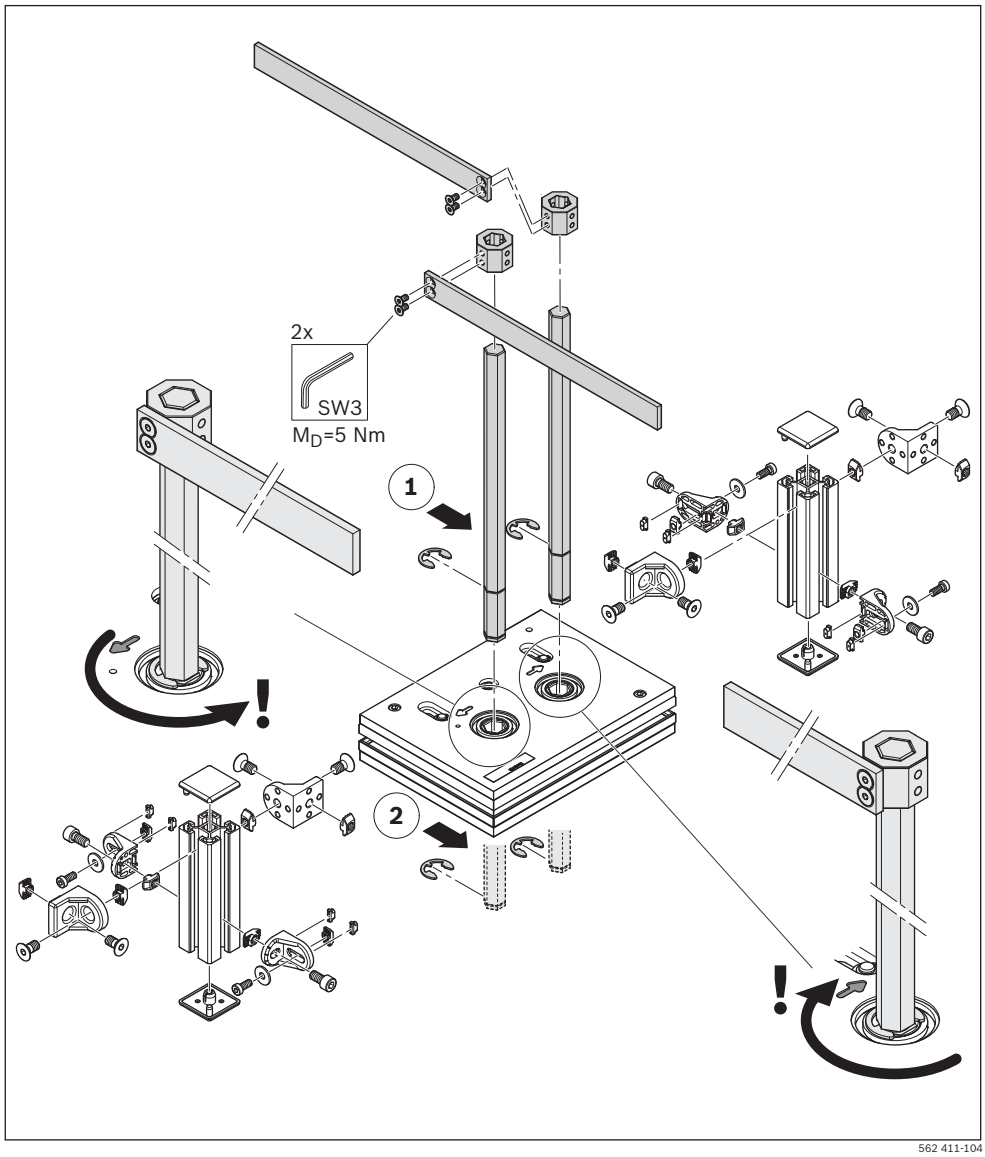

Fig. 104: Lateral guide: barrier (1/4)

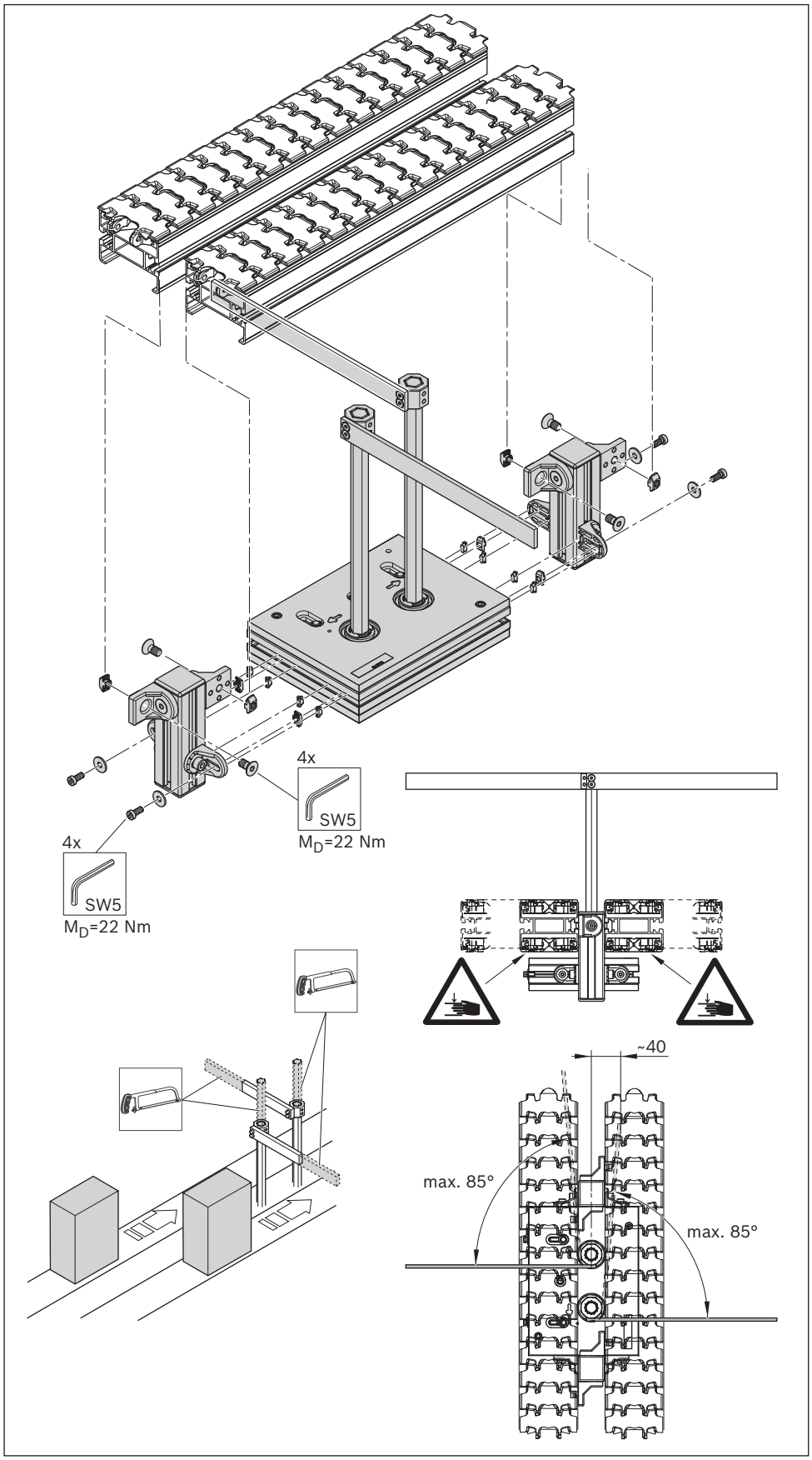

Fig. 105: Lateral guide: barrier (1/4)

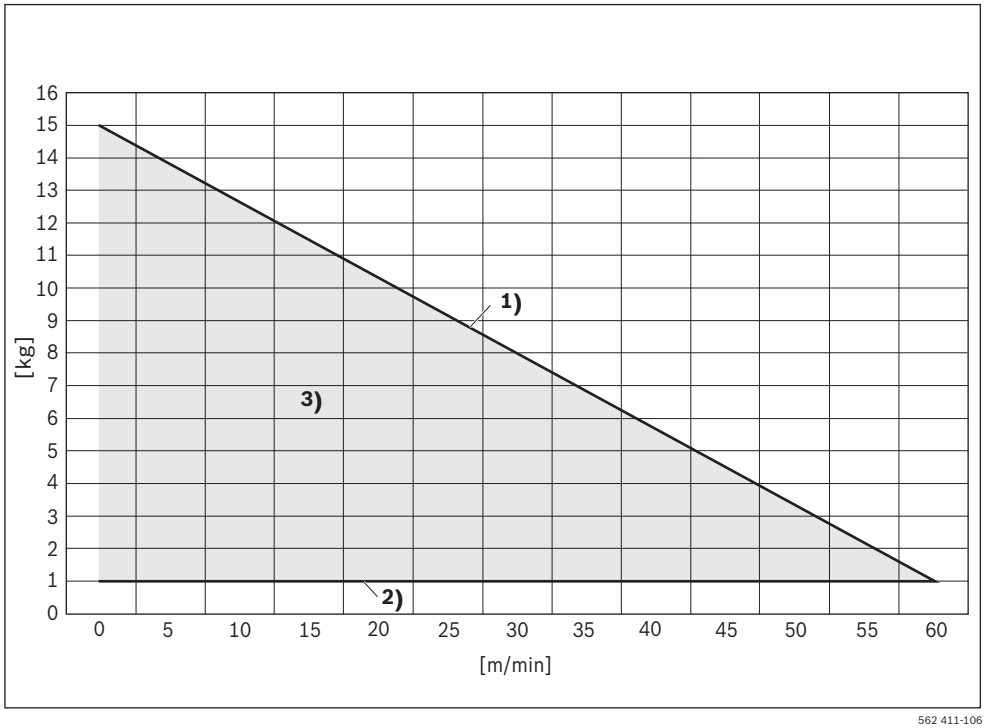

Fig. 106: Lateral guide: barrier (1/4)

1) Maximum permissible load
2) Minimum load (1 kg)
3) Permissible operating range

Required accessories:
Universal diverter (D)

D: 3842 547 703

- Install the universal diverter.

Universal diverter

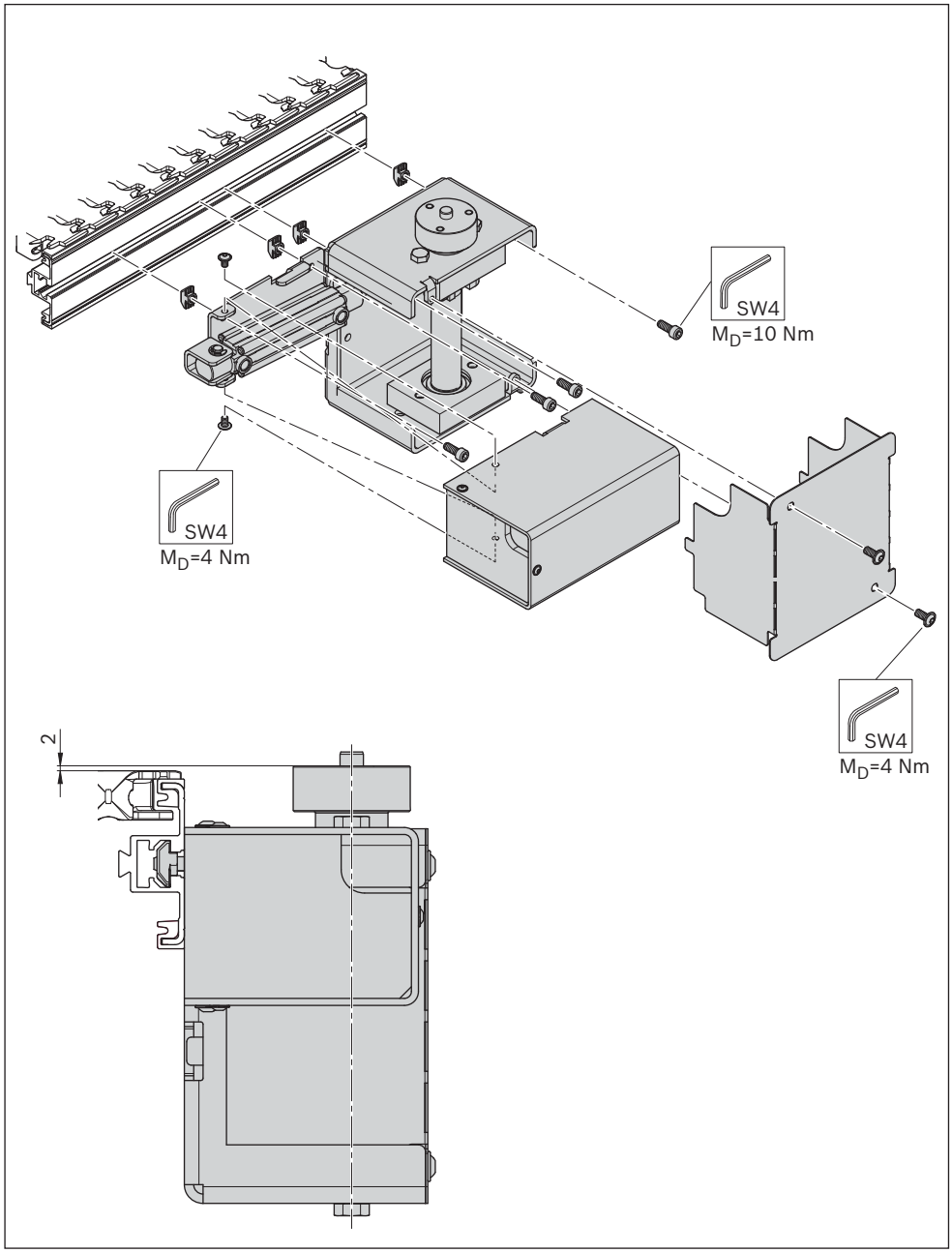

562 411-107

Fig. 107: Lateral guide: universal diverter (1/2)

ENGLISH

Pneumatics
- Oiled or non-oiled, filtered, dry compressed air.
- Operating pressure: 4 to 5 bar

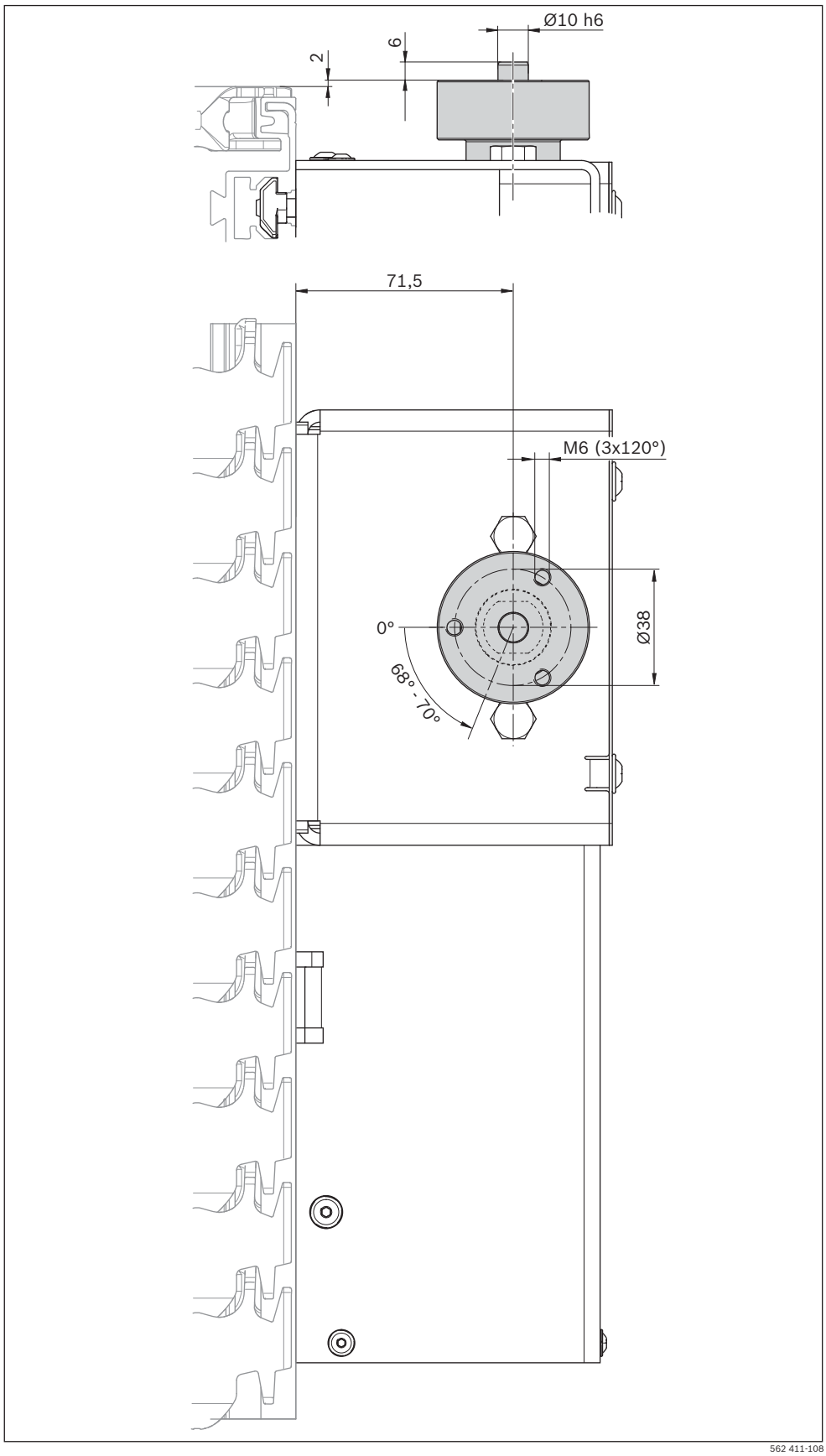

Fig. 108: Lateral guide: universal diverter (2/2)

Required accessories:
Pressure roller (E)

E: 3842 552 950

- Install the pressure roller.

Pressure roller

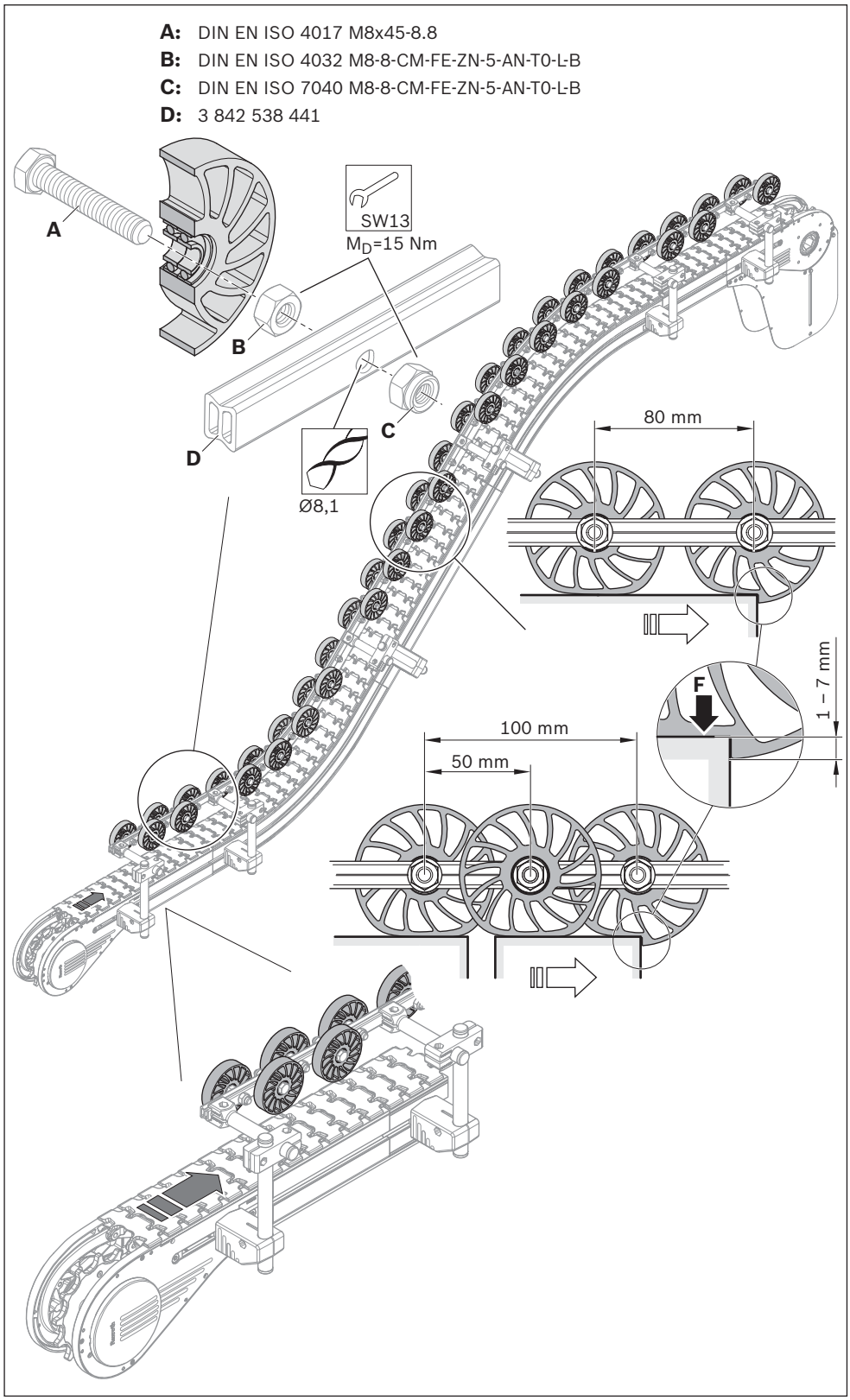

562 411-109

Fig. 109: Lateral guide: pressure roller (1/2)

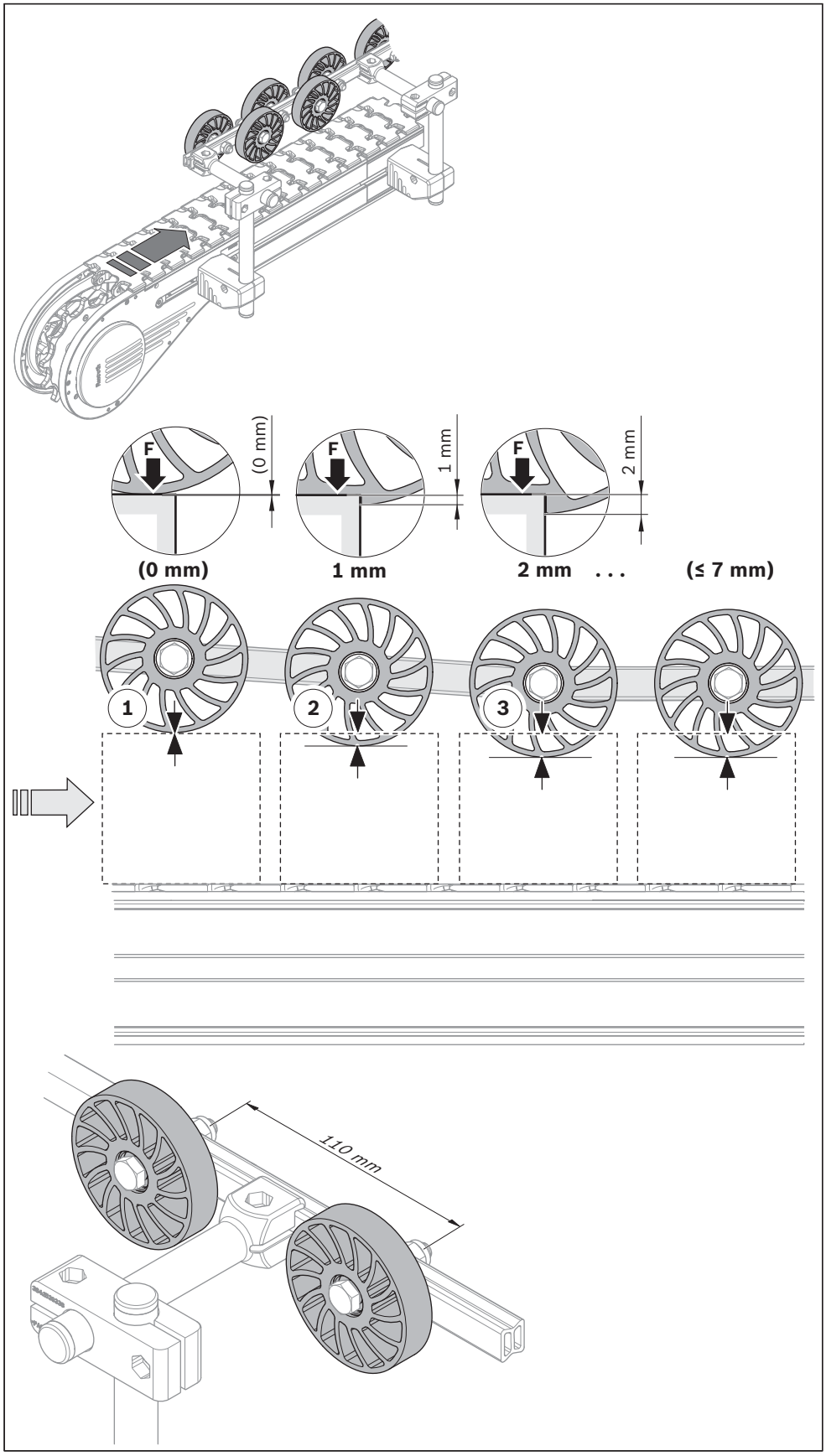

Fig. 110: Lateral guide: pressure roller (2/2)

7.5.3 Workpiece pallet system

Workpiece pallet VarioFlow

Required accessories
- Workpiece pallet (A)
- End piece (B)

A, VF 65:	**3842 541 888**
A, VF 90:	**3842 541 889**
B, VF 65:	**3842 541 902**
B, VF 90:	**3842 541 903**

▶ Install the workpiece pallet.

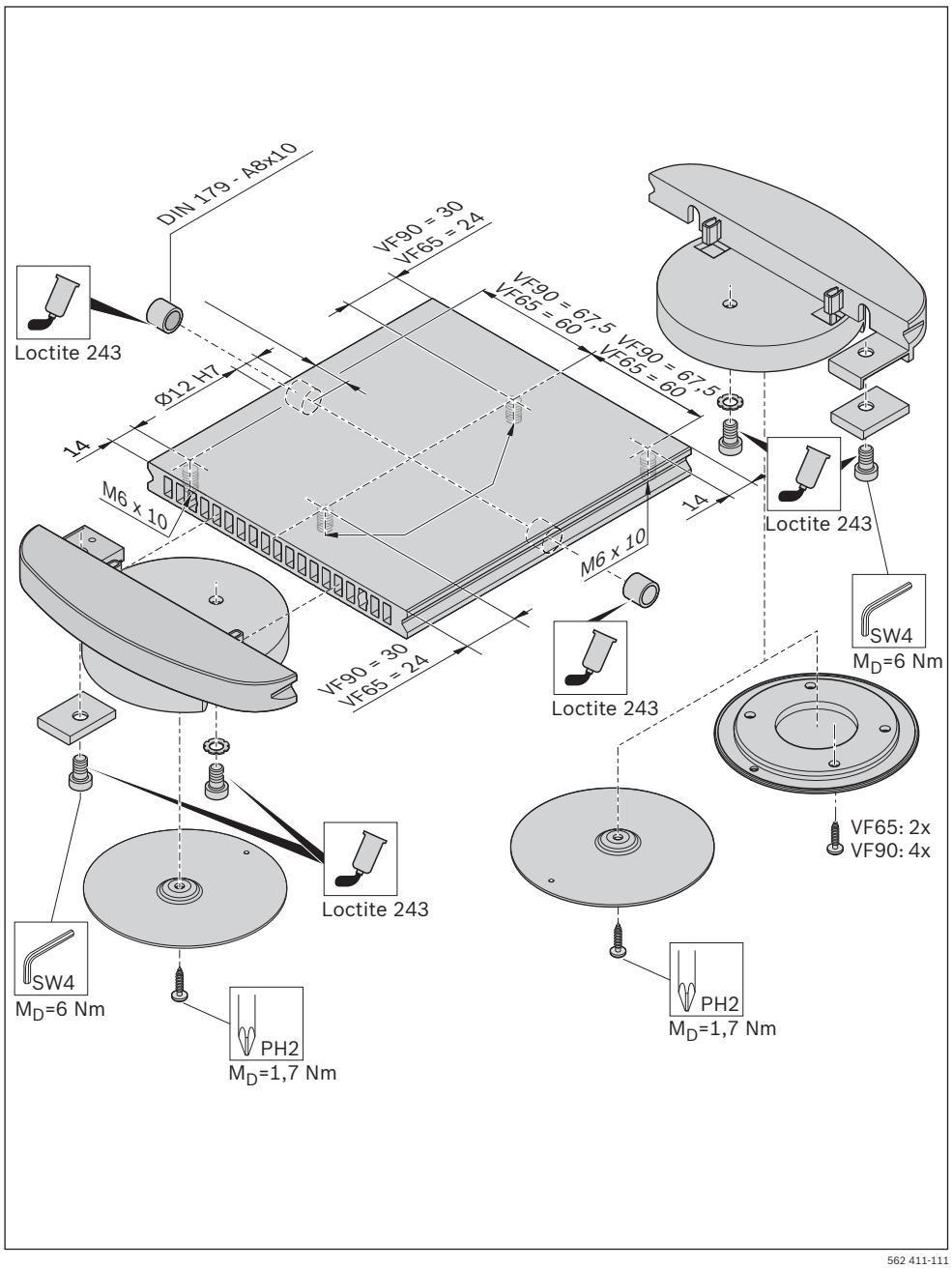

562 411-111

Fig. 111: Workpiece pallet system, workpiece pallet VarioFlow (1/2)

ENGLISH

[1]) Assembly tip: Suitable as a core pull for M6
Optimum center of gravity range for smooth operation.

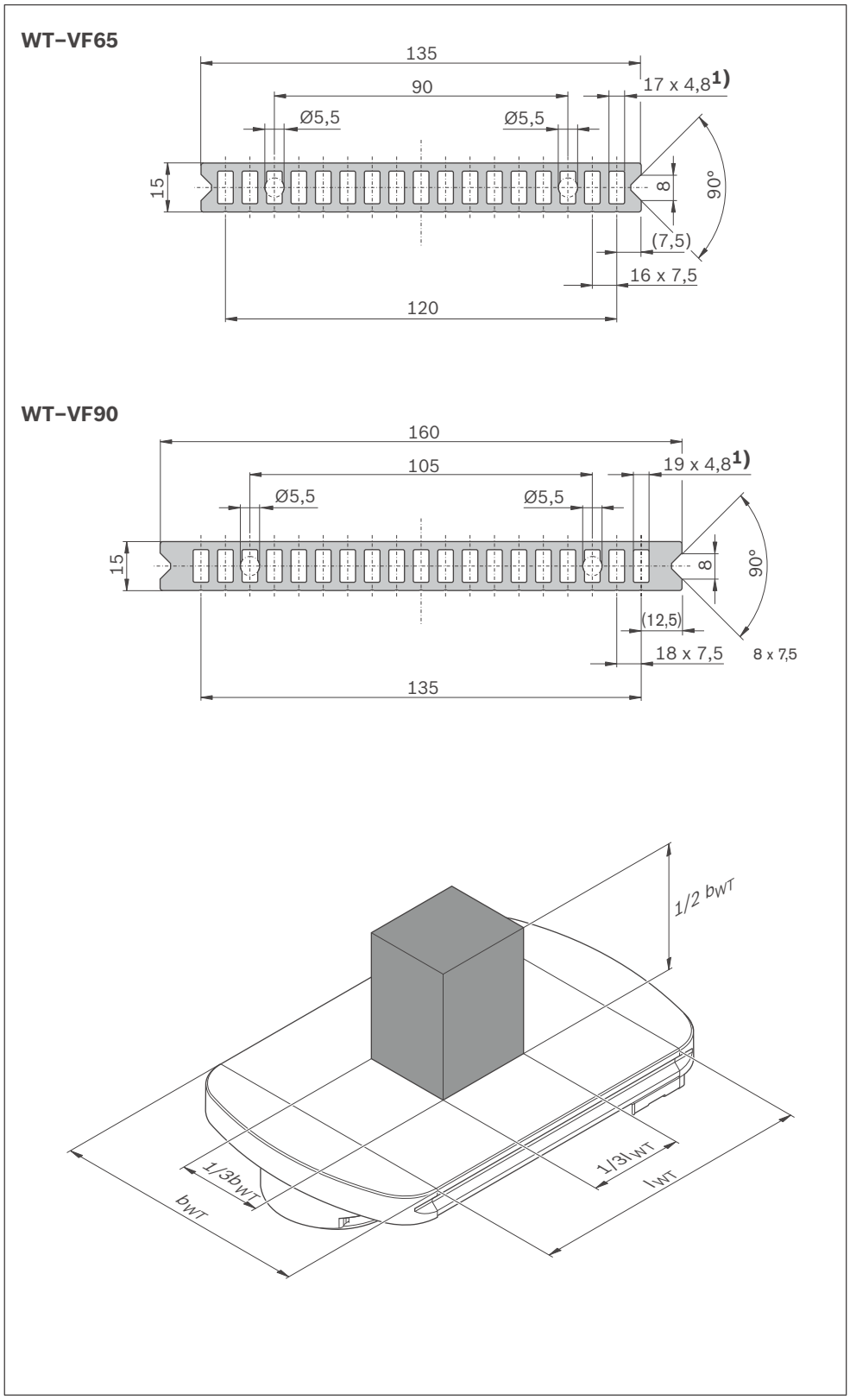

Fig. 112: Workpiece pallet system, workpiece pallet VarioFlow (2/2)

Required accessories:
Holder (C)

C: 3842 531 552

▶ Install the holder.

Holder (PA6) for lateral guide VFplus

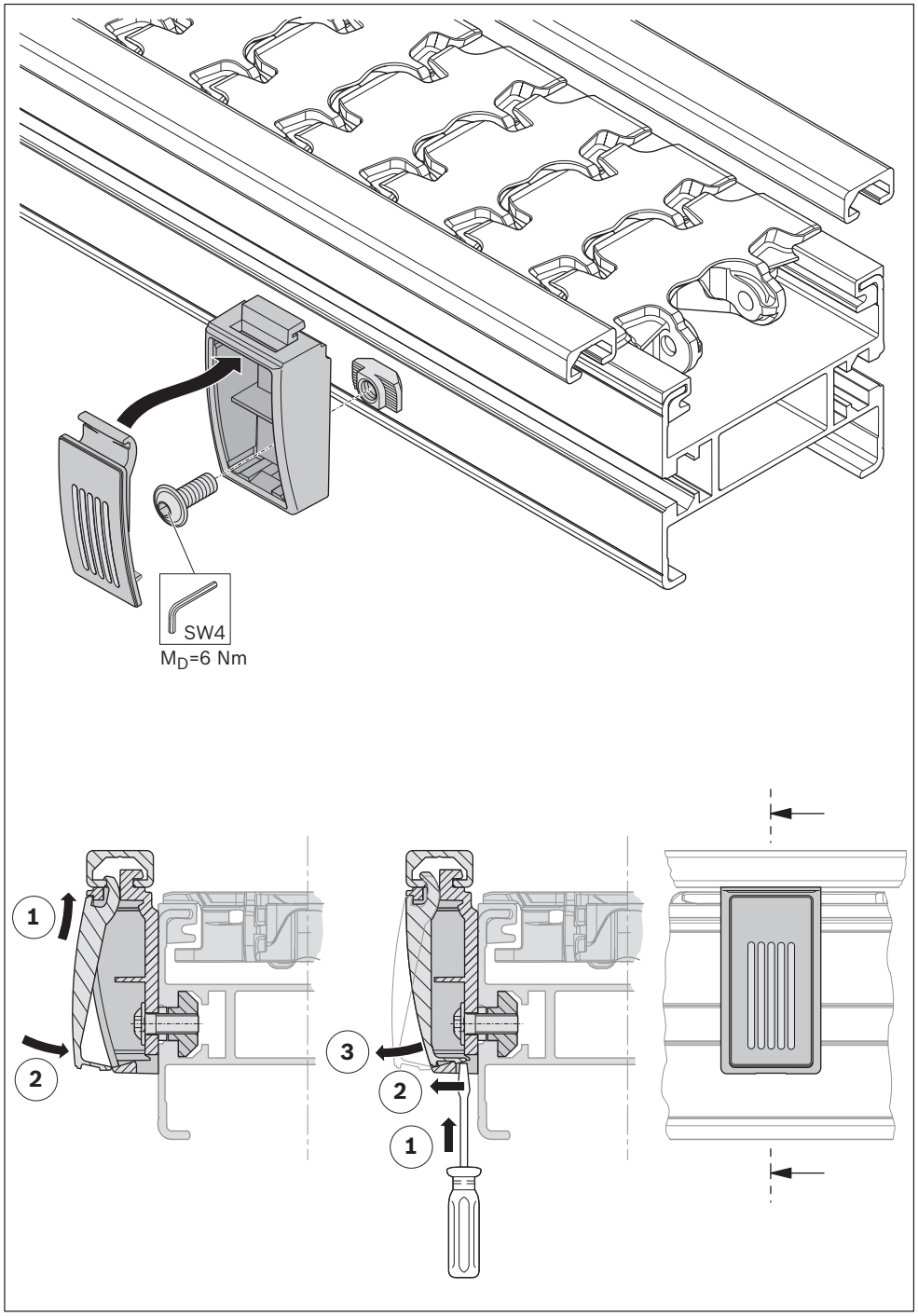

Fig. 113: Workpiece pallet system, lateral guide holder

ENGLISH

Required accessories
• Lateral guide holder (D)

D	**3842 532 980**

▶ Install the holder.

Holder (steel) for lateral guide, WT VarioFlow

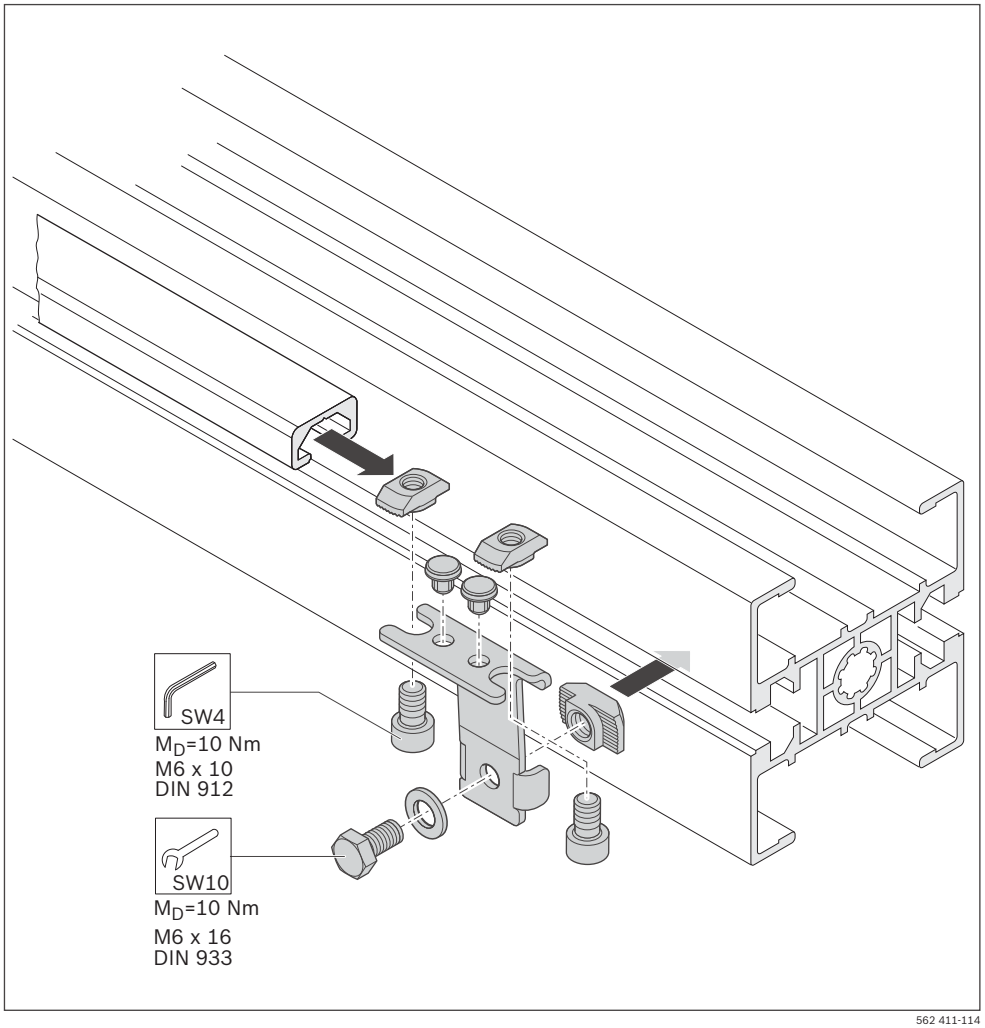

Fig. 114: Workpiece pallet system, holder for lateral guide WT

Required accessories
• Lateral guide holder (E)

E	**3842 557 005**

▶ Install the holder.

Holder (steel) for lateral guide VF*plus*

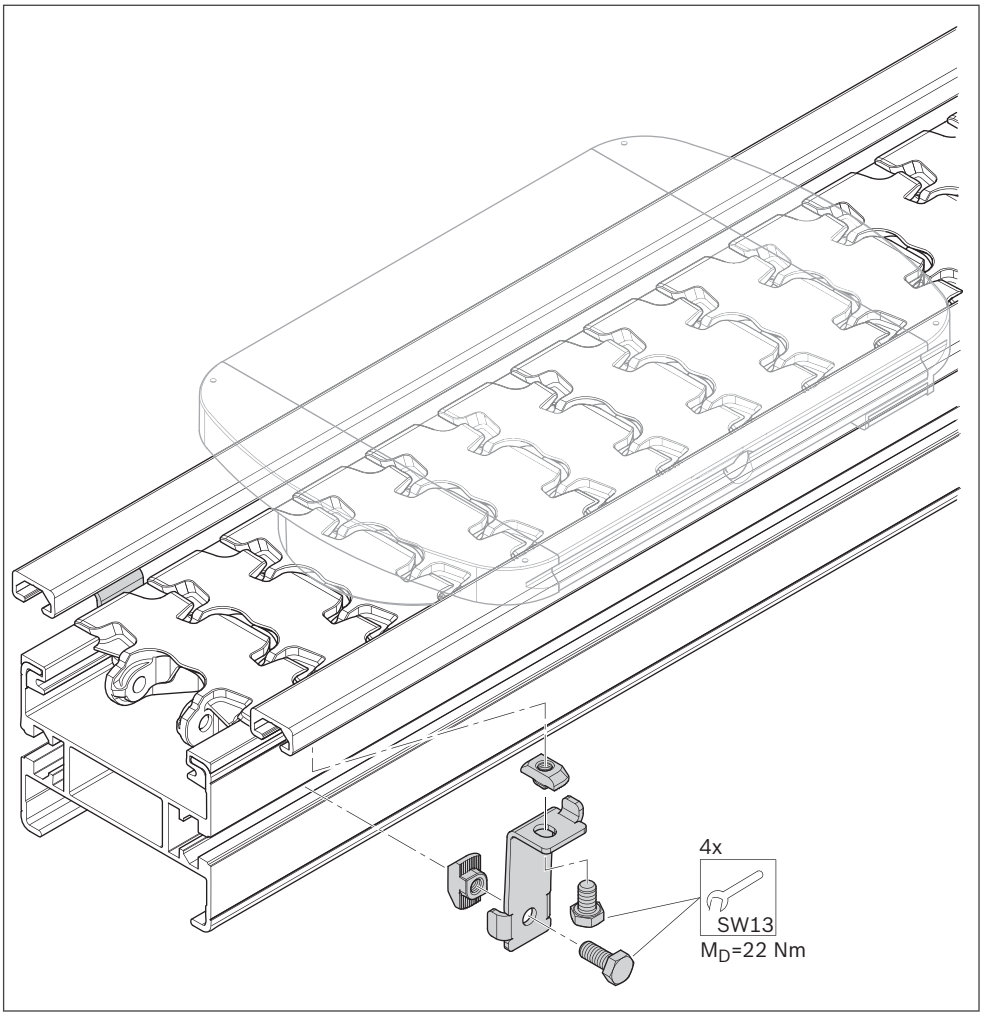

Fig. 115: Workpiece pallet system, lateral guide holder

ENGLISH

Required accessories:
• Lateral guide (F)

F, VF 65:

30°:	**3842 547 949**
45°:	**842 547 950**
90°:	**3842 547 951**
180°:	**3842 547 952**

F, VF 90:

30°:	**3842 547 953**
45°:	**3842 547 954**
90°:	**3842 547 955**
180°:	**3842 547 956**

▶ Install the lateral guide.

Curve wheel lateral guide VFplus

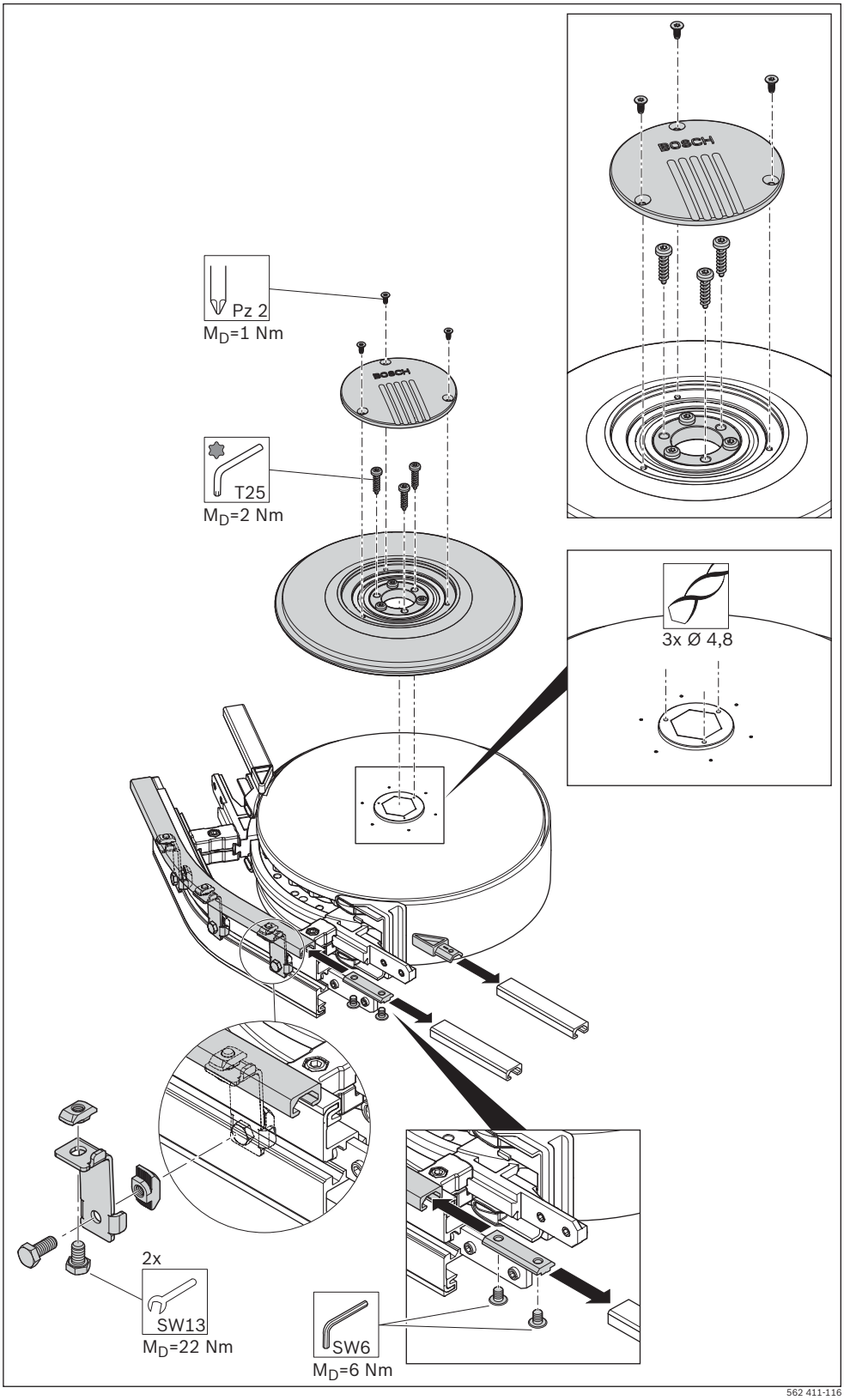

Fig. 116: Workpiece pallet system, curve wheel lateral guide (1/2)

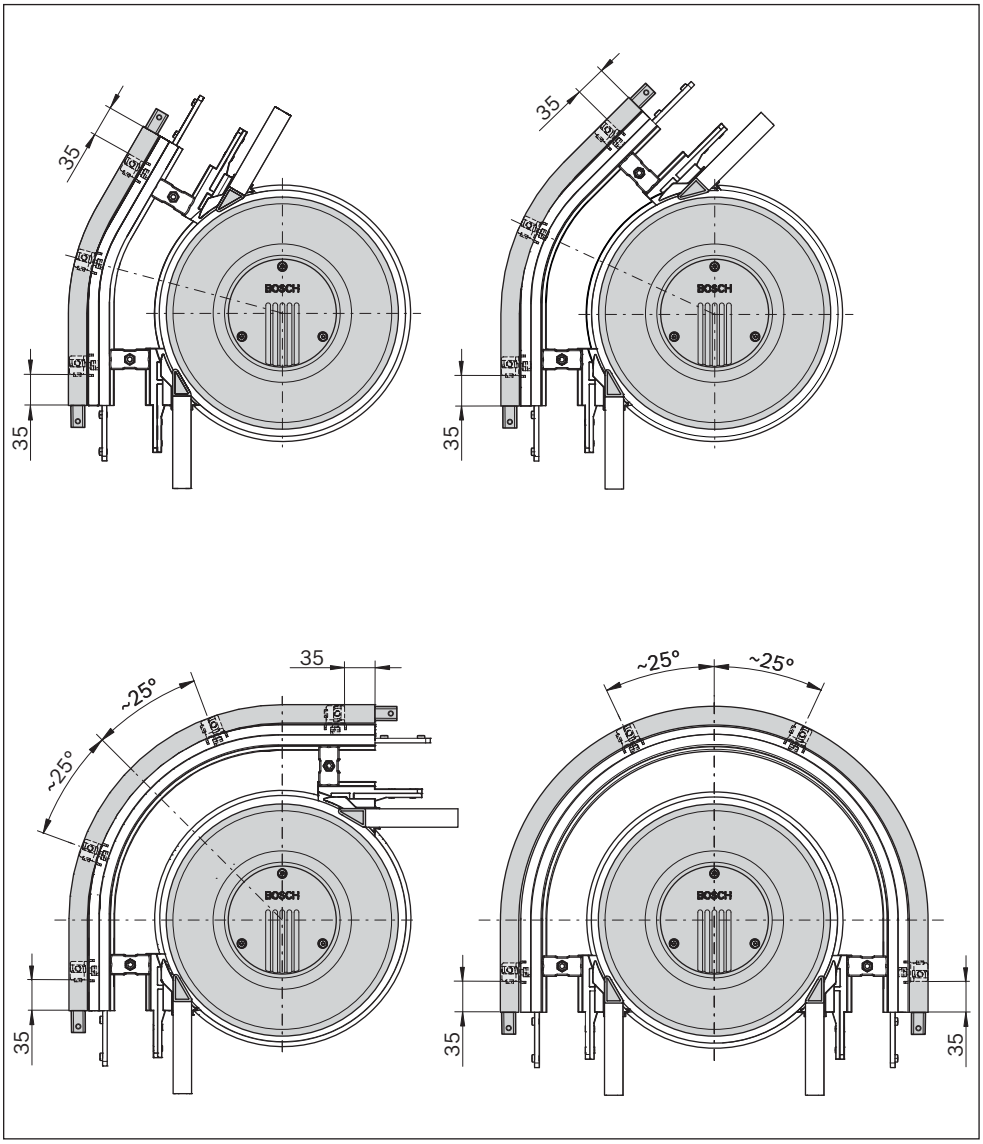

Fig. 117: Workpiece pallet system, curve wheel lateral guide (2/2)

ENGLISH

Required accessories:
- Stop gate:
  - VE-VF (G1)
  - VE-VF/M (G2)

G1:	**3842 528 852**
G2:	**3842 559 135**

Optional accessories:
- Switch bracket SH VF/UV (not included in the scope of delivery)

H:	**3842 557 603**

Please note: **Safety instructions!**
The stop gates VE-VF and VE-VF/M are designed only for workpiece pallet separation in the Rexroth VarioFlow *plus* chain conveyor system. Pressure must not be exerted on stop gates VE-VF and VE-VF/M by pallets traveling in reverse.

▶ Install the stop gate.

[1]) Sensor is not included in the scope of delivery

Stop gate VE-VF / VE-VF/M

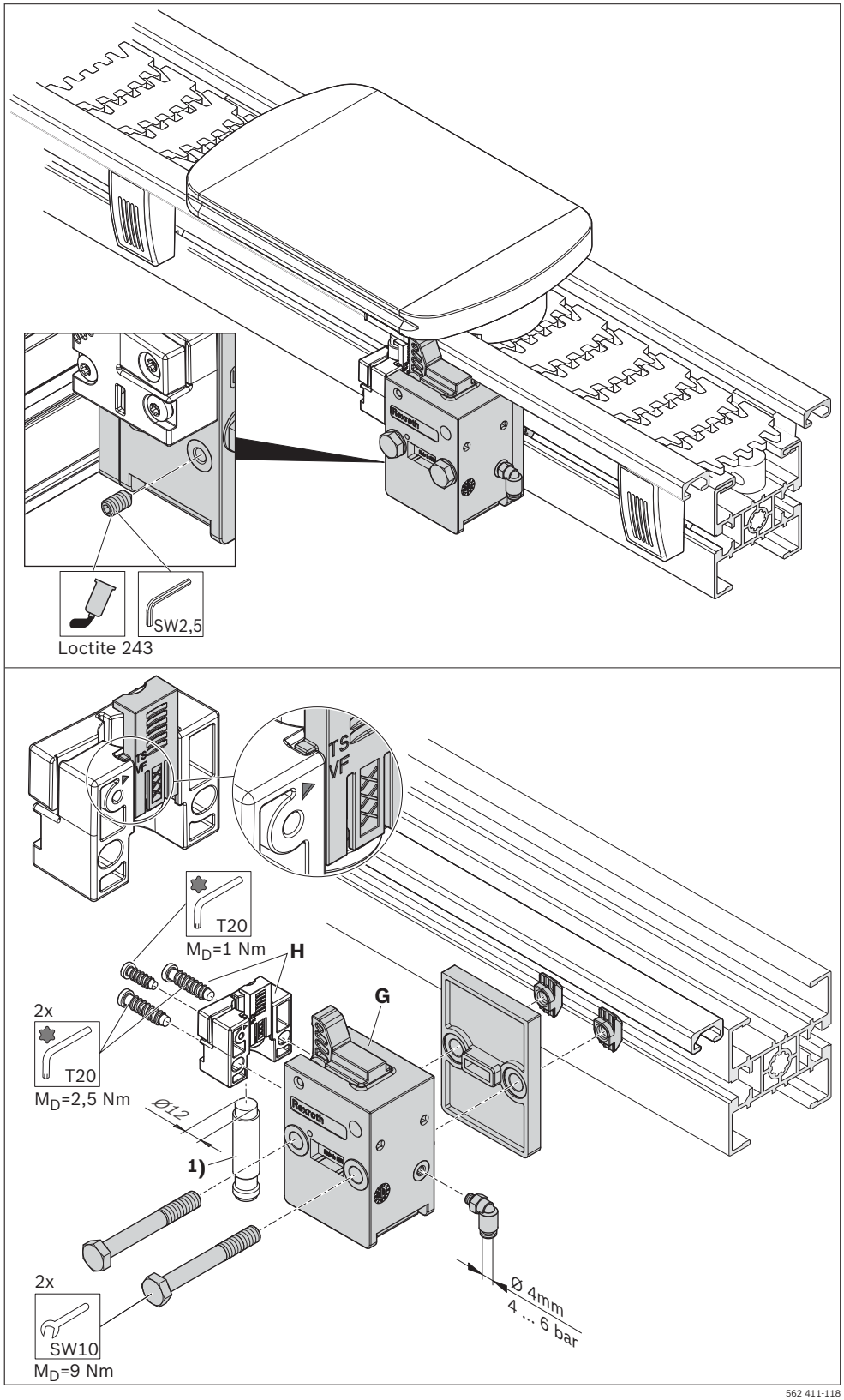

Fig. 118: Workpiece pallet system, stop gate VE 2/VF

Required accessories:
• Return stop VF WT (J)

J: 3842 553 090

▶ Install the return stop.

Return stop VF WT

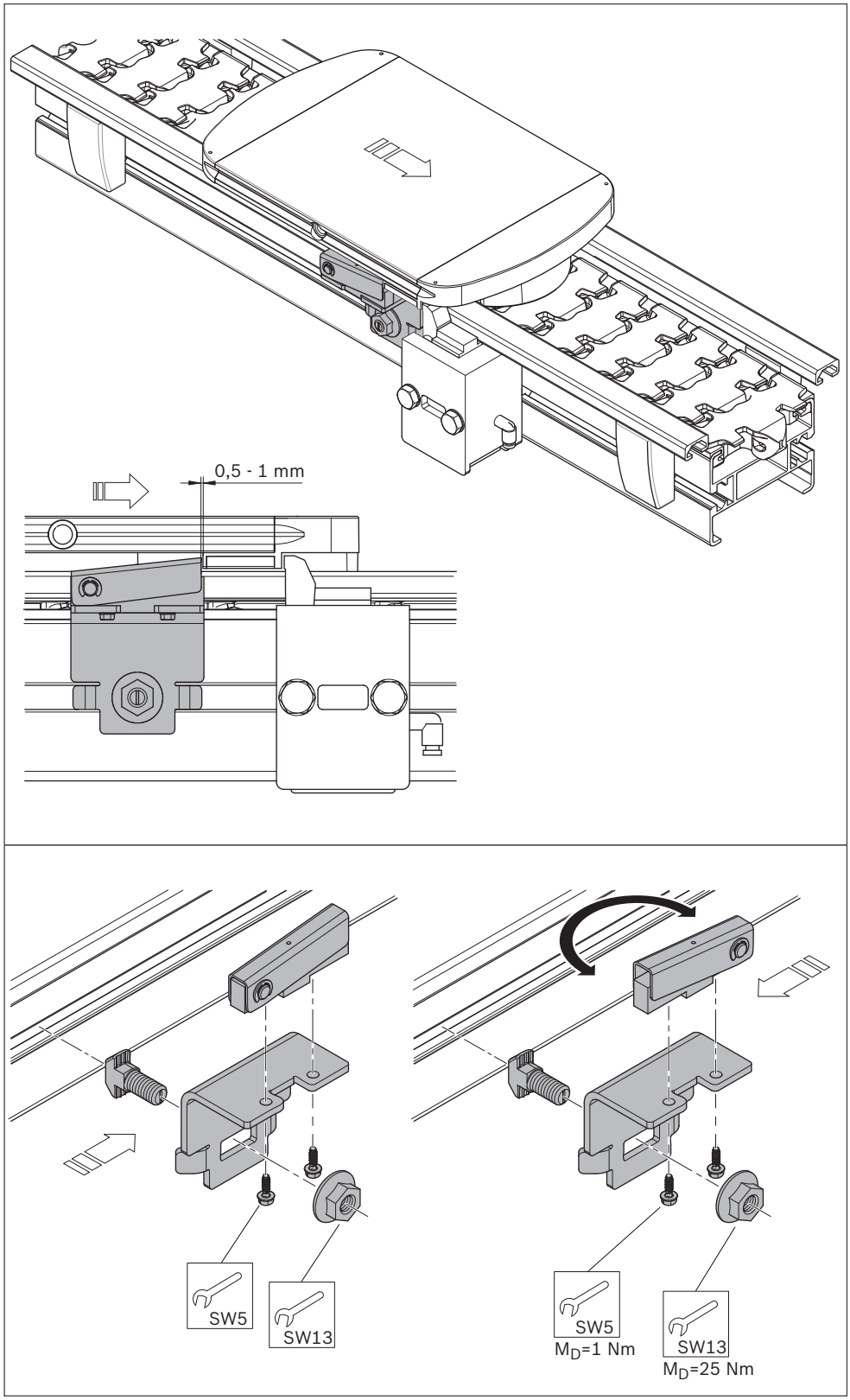

Fig. 119: Workpiece pallet system, return stop VF WT

ENGLISH

Switch bracket VF/U

Required accessories
- Switch bracket VF (K)

K: 3842 557 601

▶ Install the switch bracket.

[1]) Sensor is not included in the scope of delivery

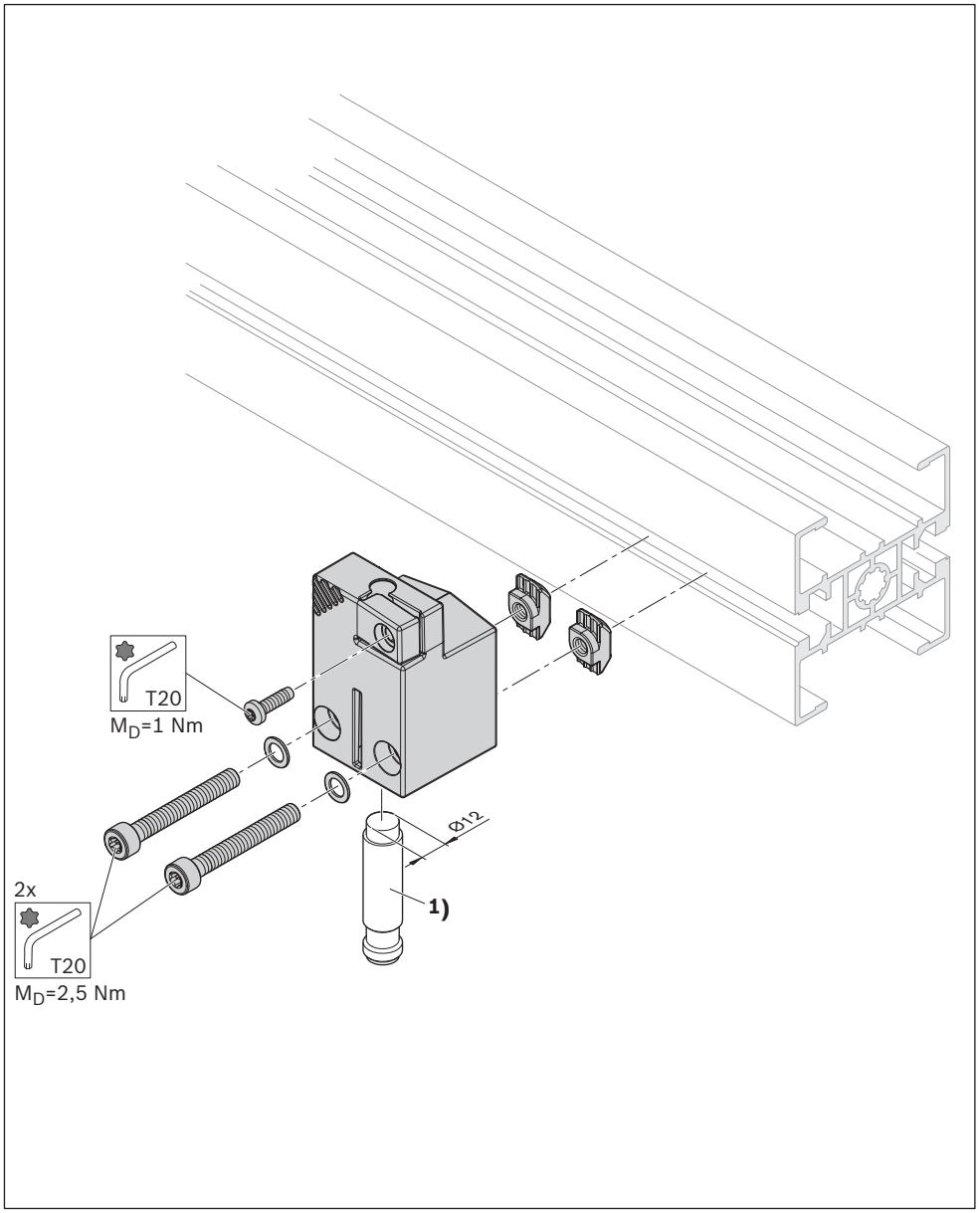

Fig. 120: Workpiece pallet system, switch bracket VF

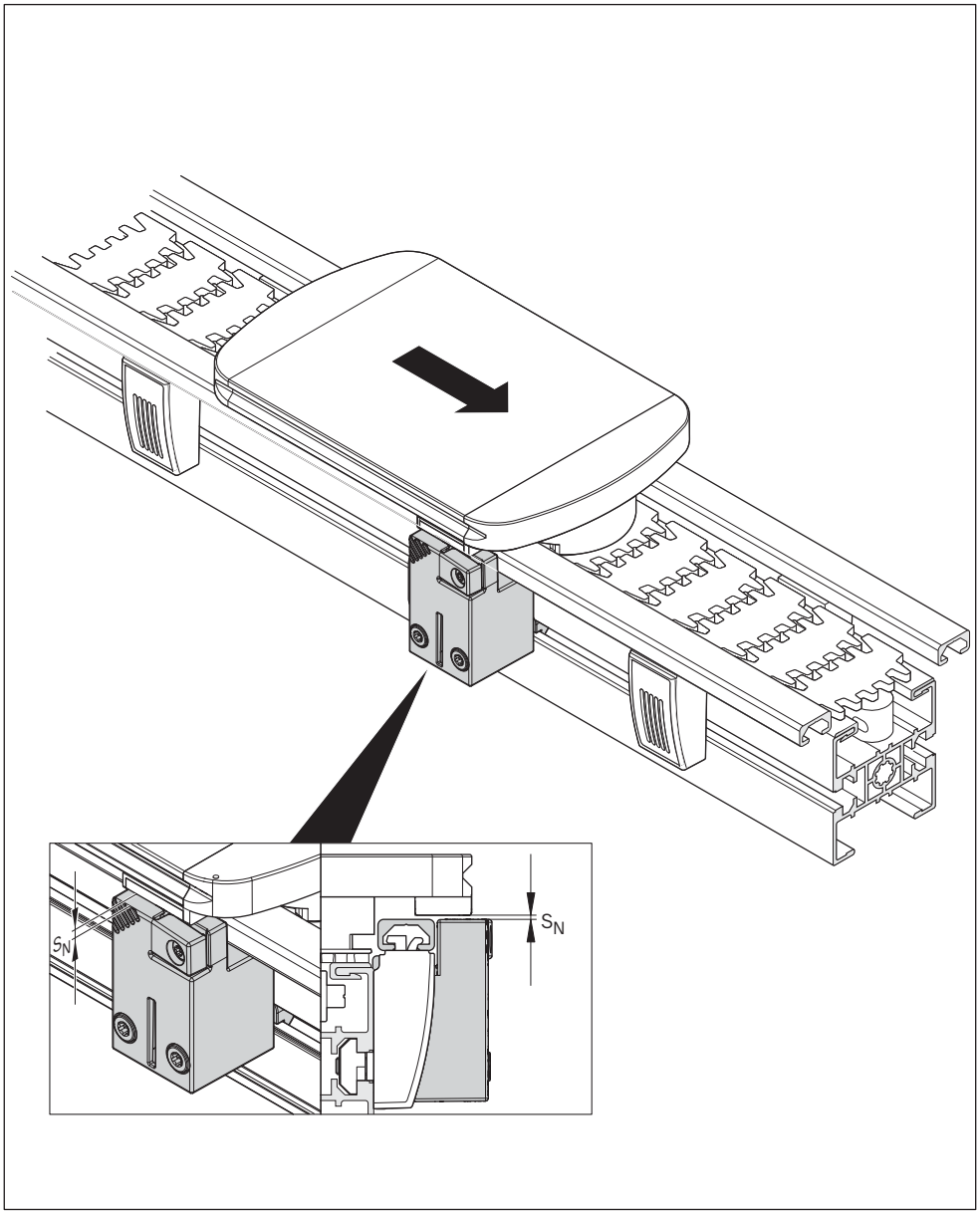

Fig. 121: Workpiece pallet system, switch bracket VF

S_N: switching distance of the sensor (e.g. Balluff: 1-2 mm)

Required accessories
• Positioning unit (L)

L: 3842 532 762

Please note:
Safety instructions!
The VarioFlow WT positioning unit is intended for positioning workpiece pallets in the Rexroth VarioFlow chain conveyor system.
Before carrying out any repair or maintenance work, switch off the power supplies (main switch, pressure reducing valve, etc.)!
In addition, measures are required to prevent unintended reactivation, e.g, attach an appropriate “Maintenance work”, “Repair work” warning sign, etc. to the main switch!

▶ Install the positioning unit.

Positioning unit

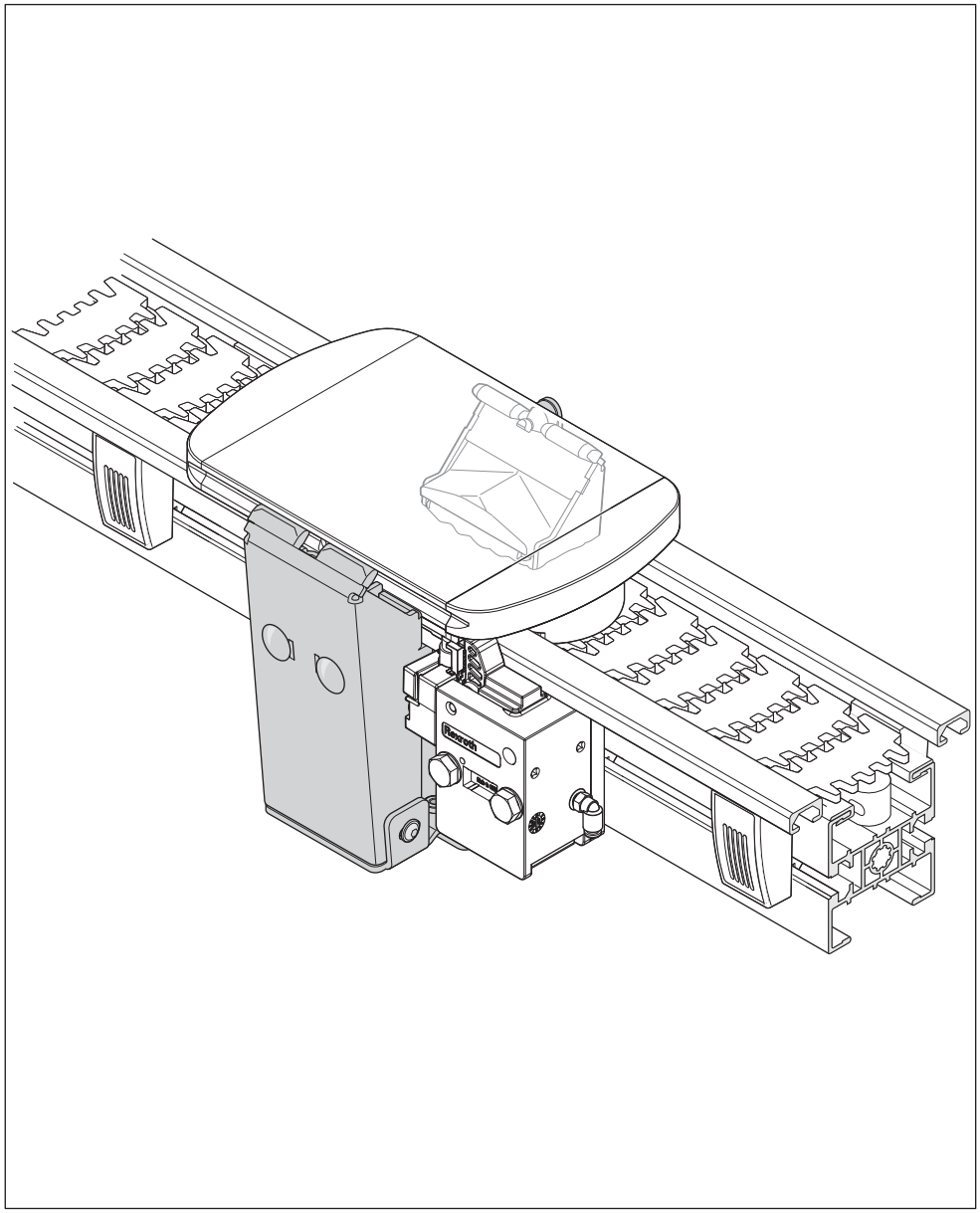

Fig. 122: Workpiece pallet system, positioning unit (1/3)

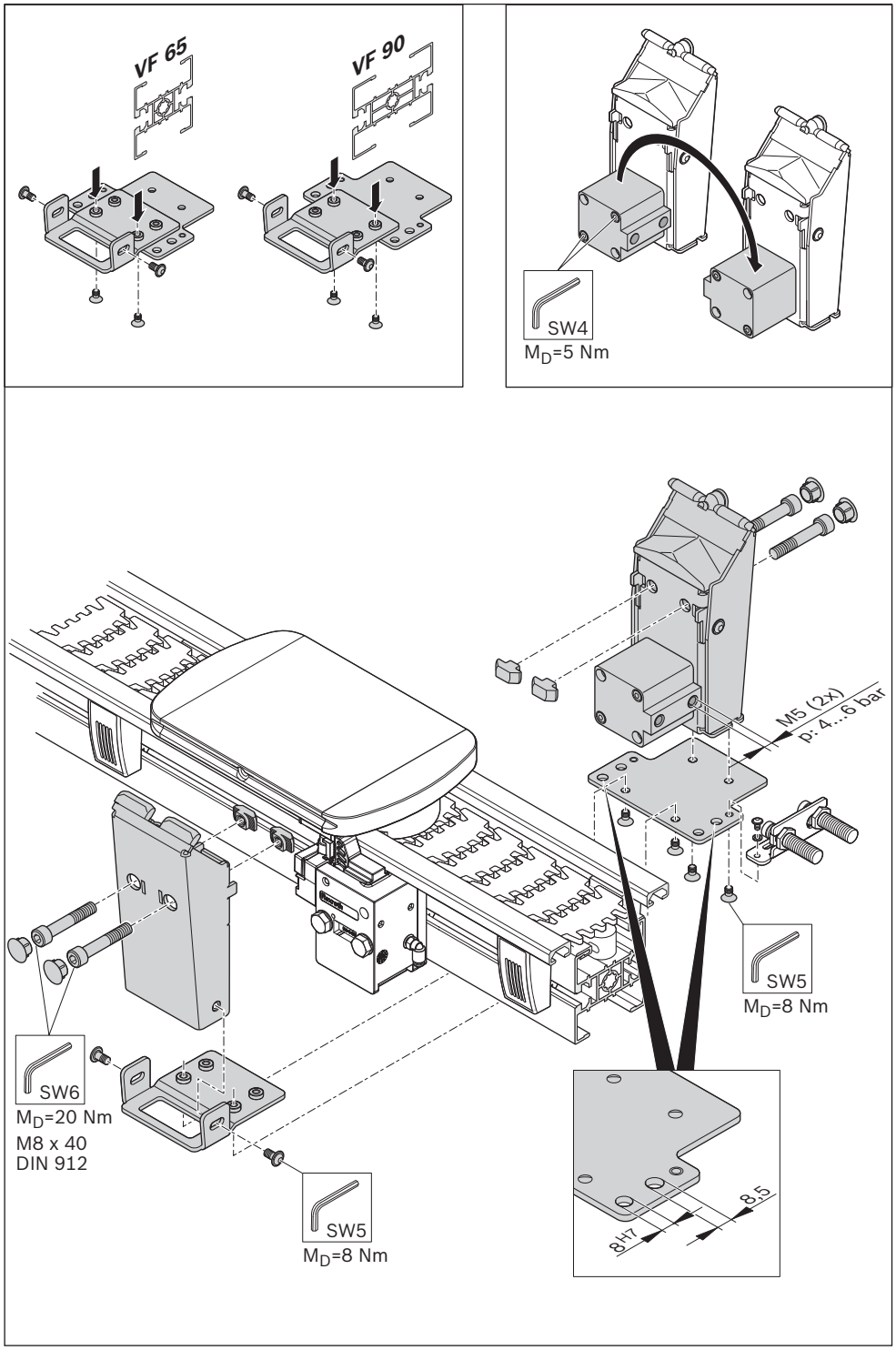

562 411-123

Fig. 123: Workpiece pallet system, positioning unit (2/3)

ENGLISH

Start-up:
Only operate the positioning unit with 2 throttle check valves (G 1/8“, 0 821 200 187)

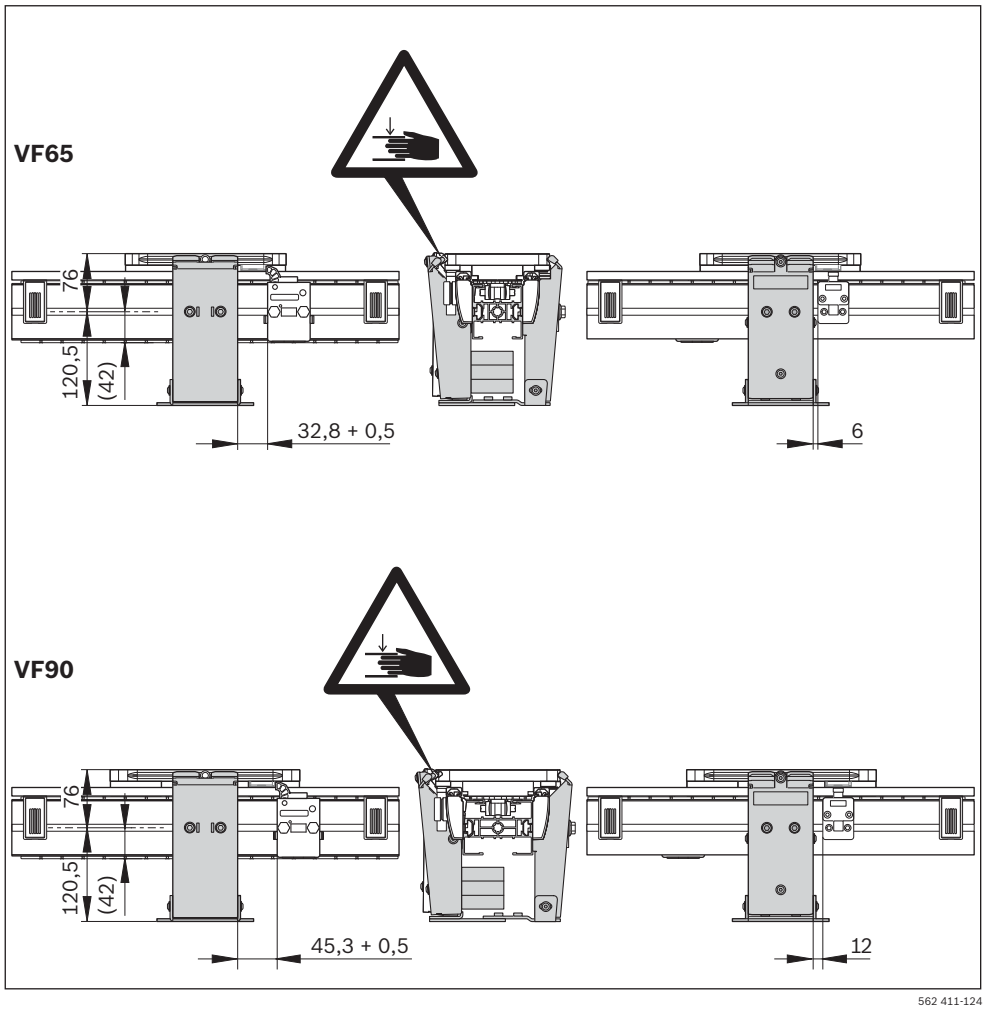

Fig. 124: Workpiece pallet system, positioning unit (3/3)

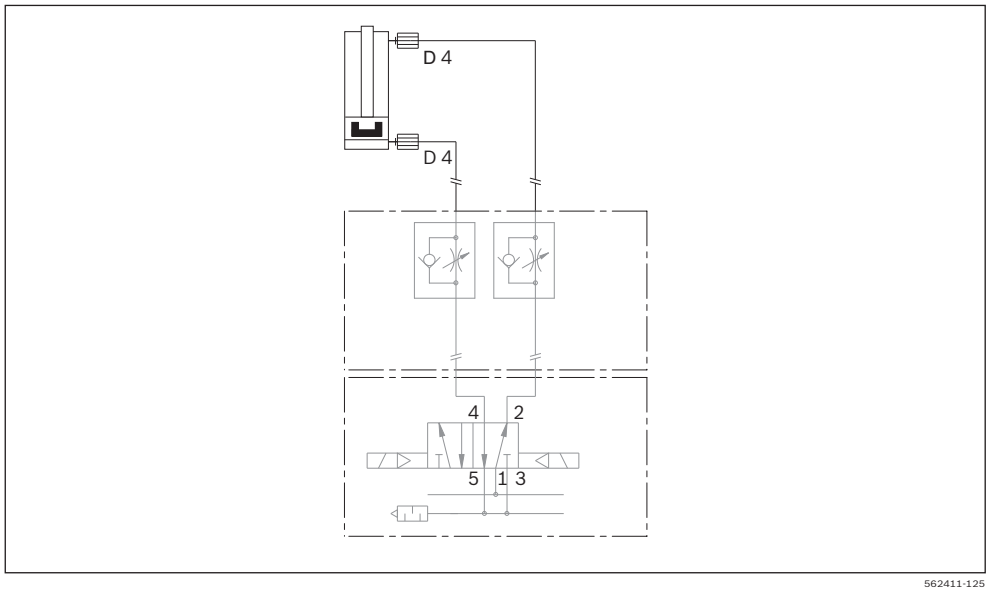

Fig. 125: Positioning unit circuit diagram

Required accessories
• Section transfer (M)

M:	**3842 535 001**
M:	**3842 535 002**
M:	**3842 535 003**
M:	**3842 535 004**

▶ Install the section transfer.

Section transfer VarioFlow

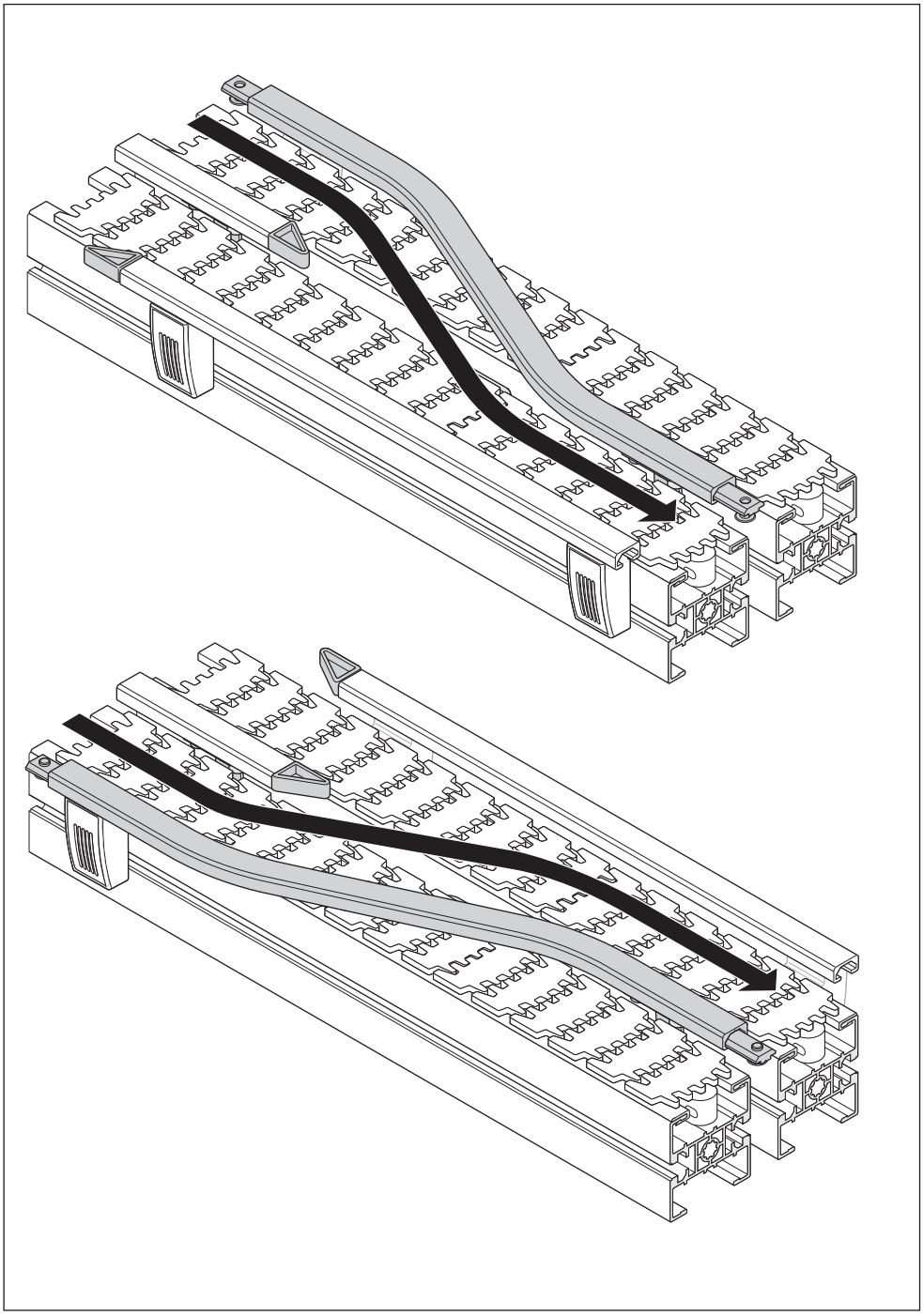

Fig. 126: Workpiece pallet system, section transfer VarioFlow (1/2)

ENGLISH

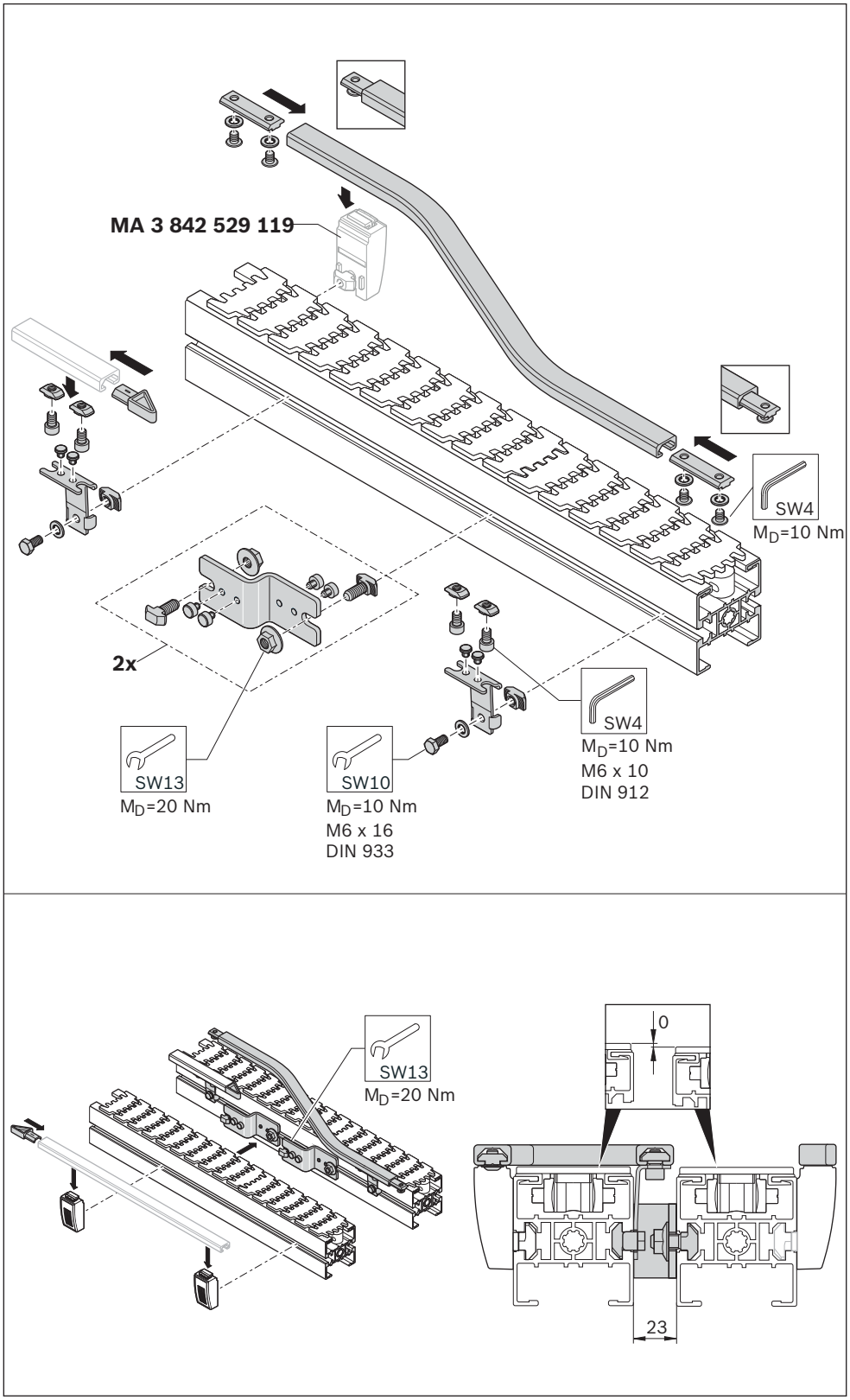

Fig. 127: Workpiece pallet system, section transfer VarioFlow (2/2)

Section link VarioFlow

Required accessories
- Section link (N)

N: 3842 532 998

▶ Install the section link.

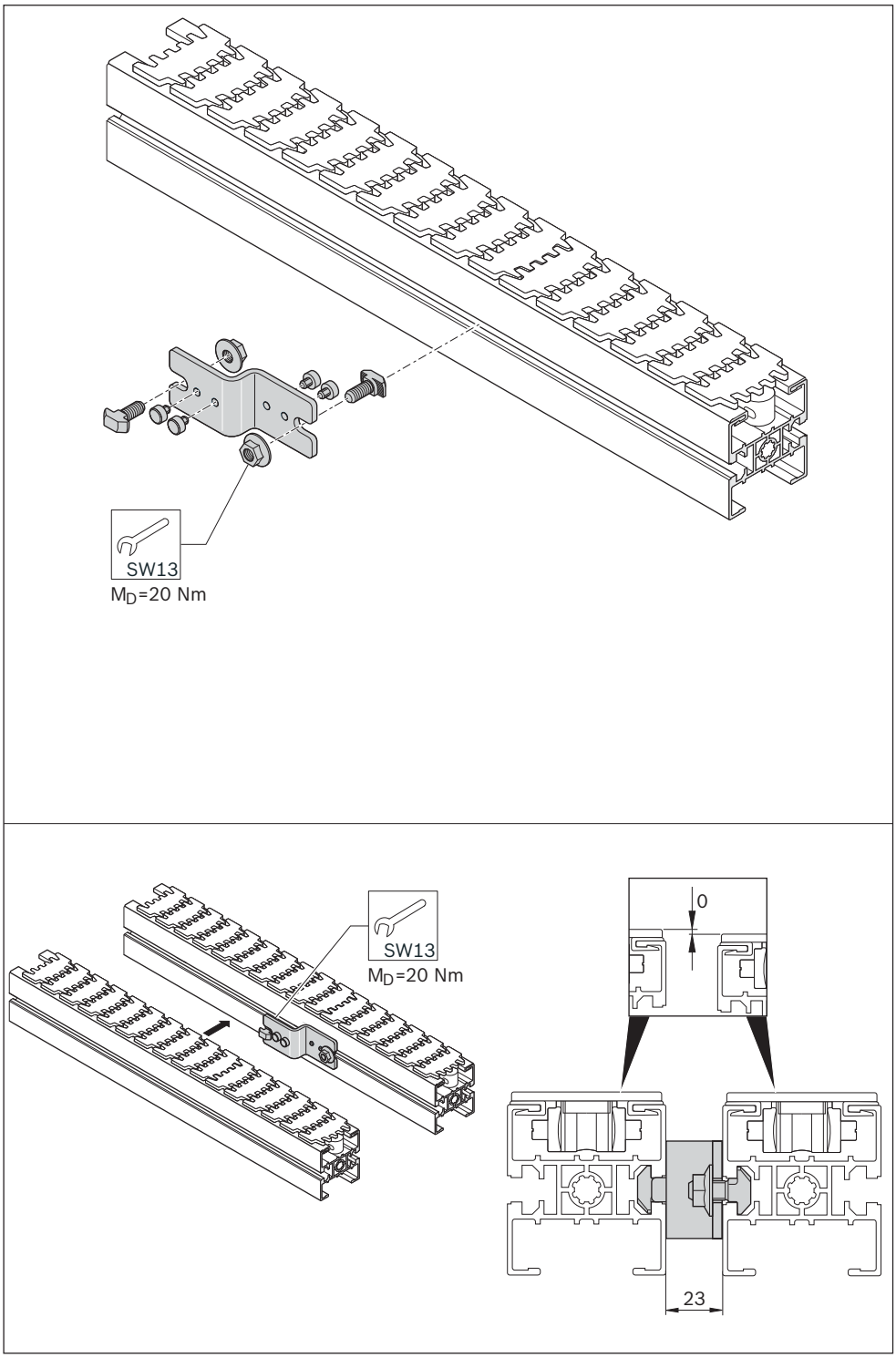

Fig. 128: Workpiece pallet system, section link VarioFlow

ENGLISH

Required accessories
• Diverter kit (O)

O, VF 65,

45°, right:	**3842 551 104**
45°, left:	**3842 551 105**
90°, right:	**3842 551 111**
90°, left:	**3842 551 121**

O, VF 90,

45°, right:	**3842 551 090**
45°, left:	**3842 551 091**
90°, right:	**3842 551 110**
90°, left:	**3842 551 100**

Please note: **Safety instructions!**
The VarioFlow WT diverter is intended for steering workpiece pallets in the Rexroth VarioFlow *plus* chain conveyor system.

▶ Install the diverter kit.

Diverter kit

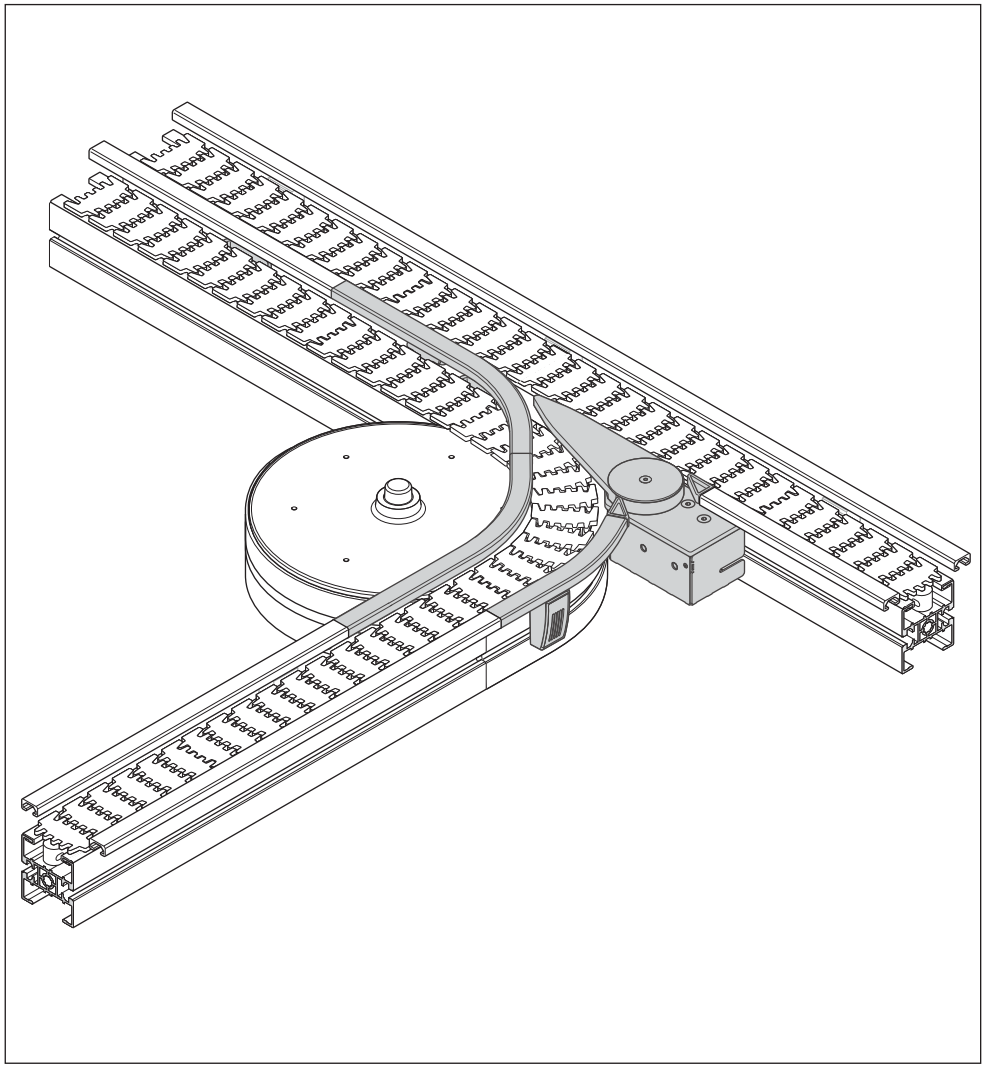

Fig. 129: Workpiece pallet system, diverter kit (1/7)

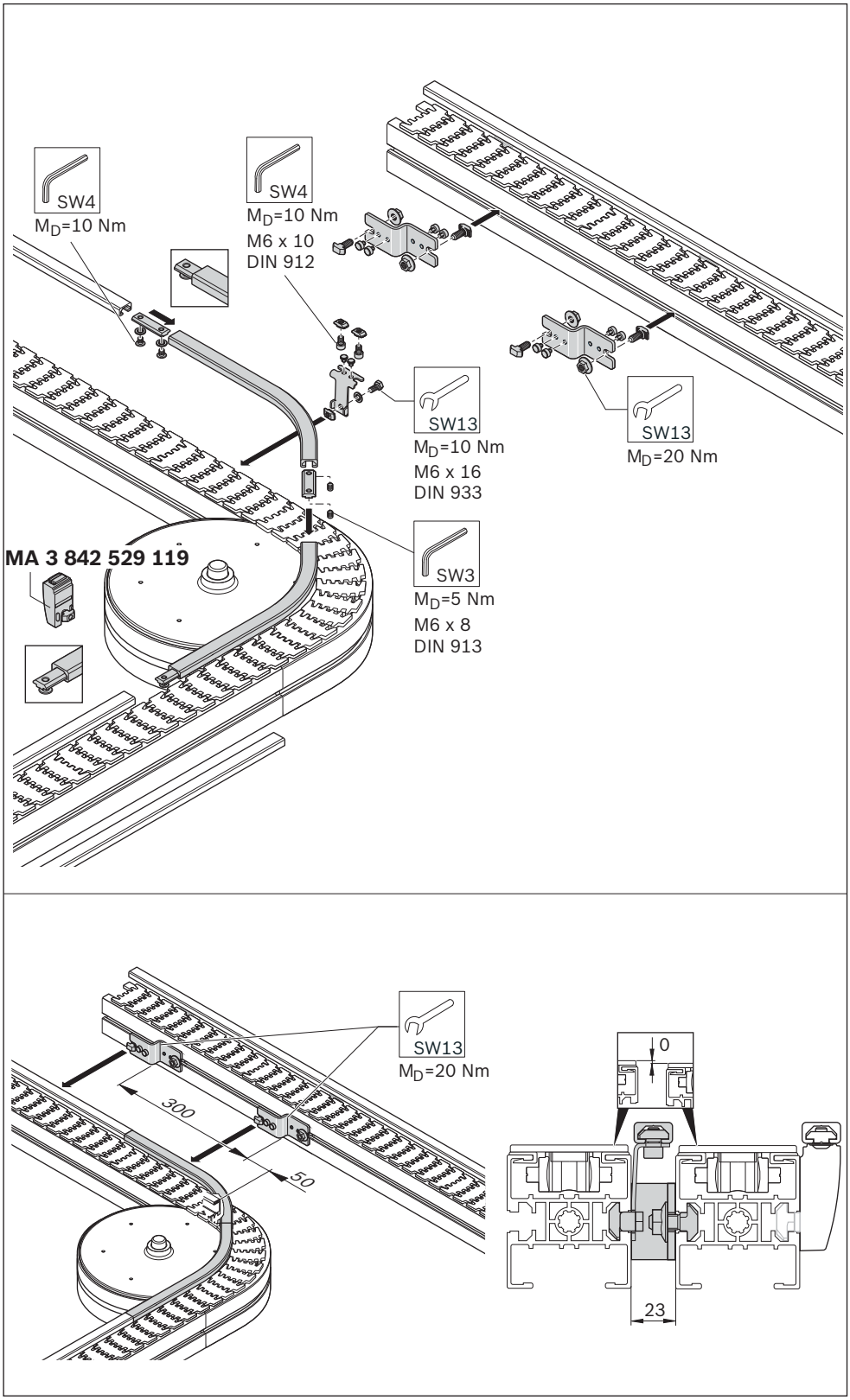

562 411-130

Fig. 130: Workpiece pallet system, diverter kit (2/7)

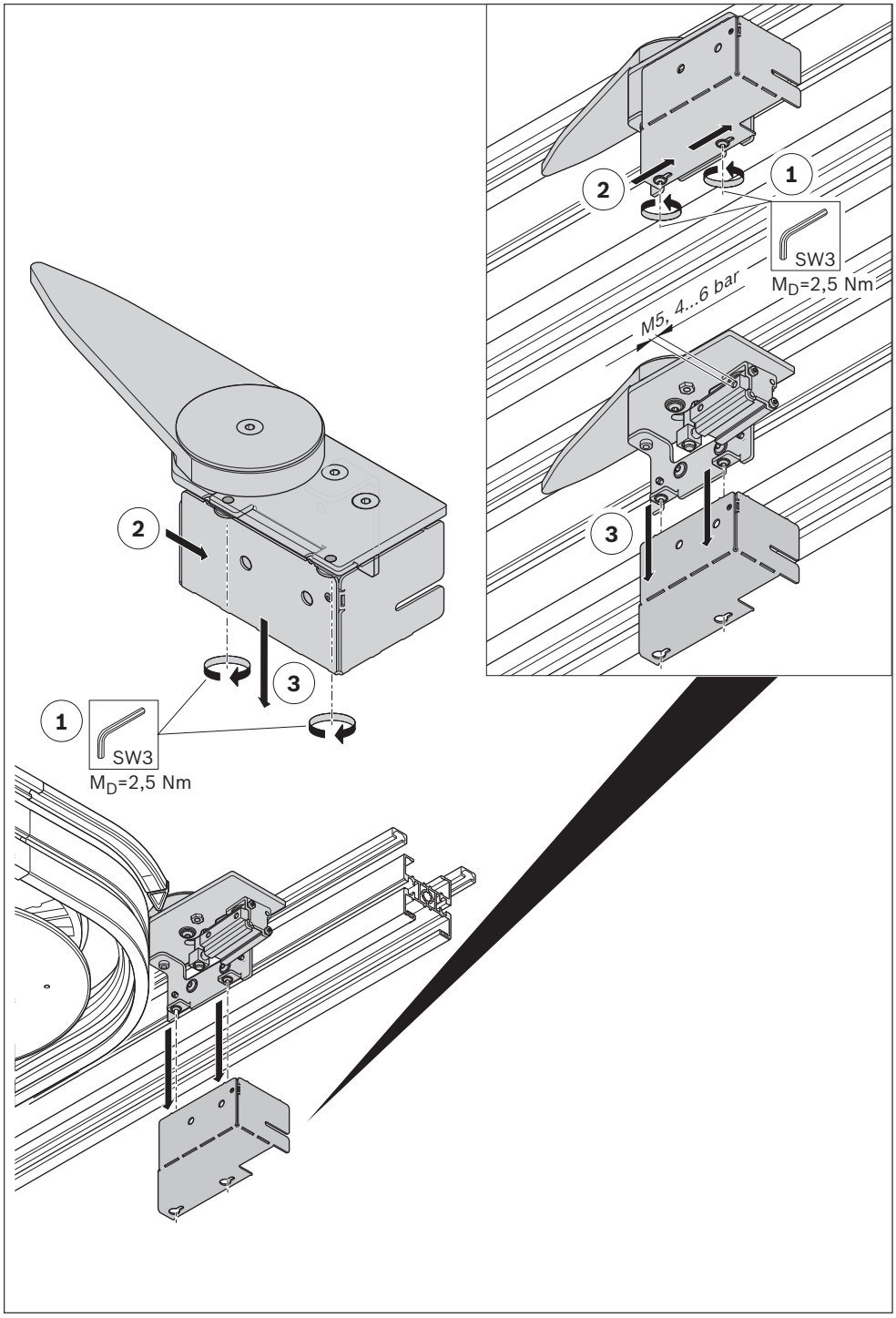

Fig. 131: Workpiece pallet system, diverter kit (3/7)

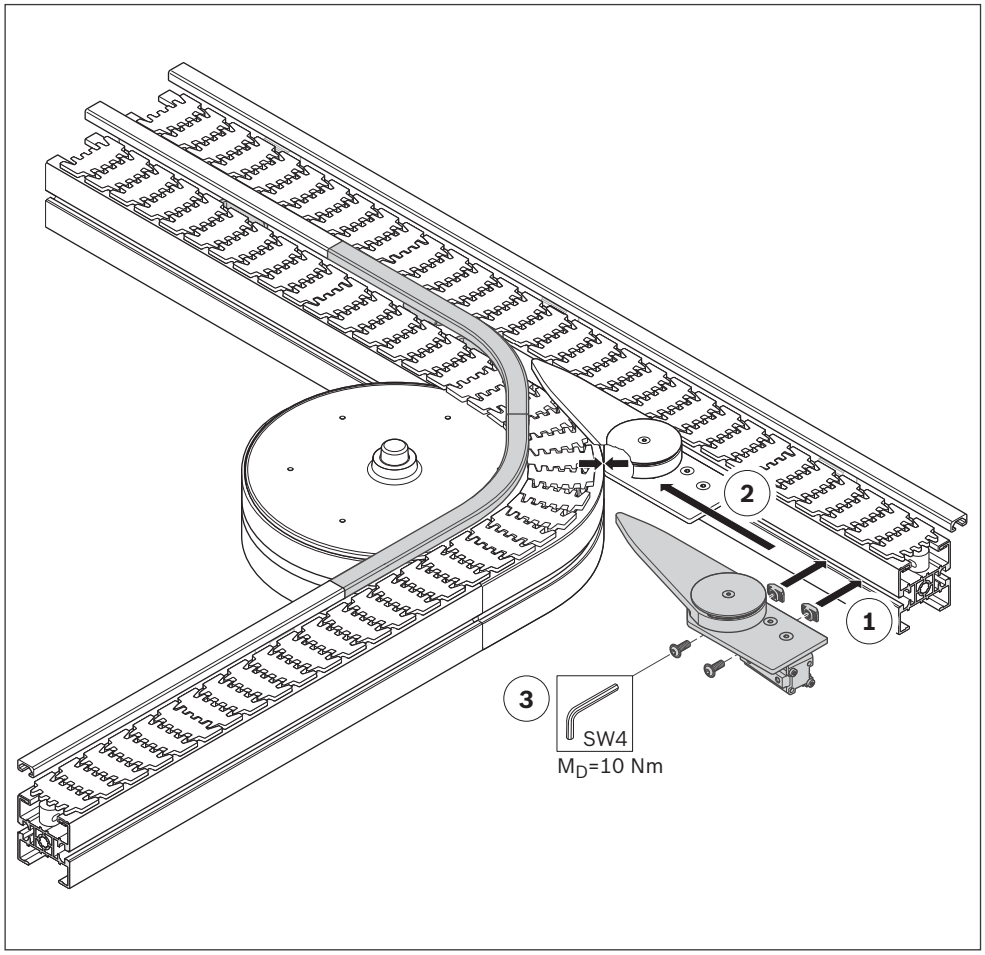

562 411-132

Fig. 132: Workpiece pallet system, diverter kit (4/7)

Start-up:
Only operate the diverter with 2 throttle check valves (G 1/8“, 0 821 200 187) to adjust the swiveling speed of the diverter blade and to cushion the impact on the stop.

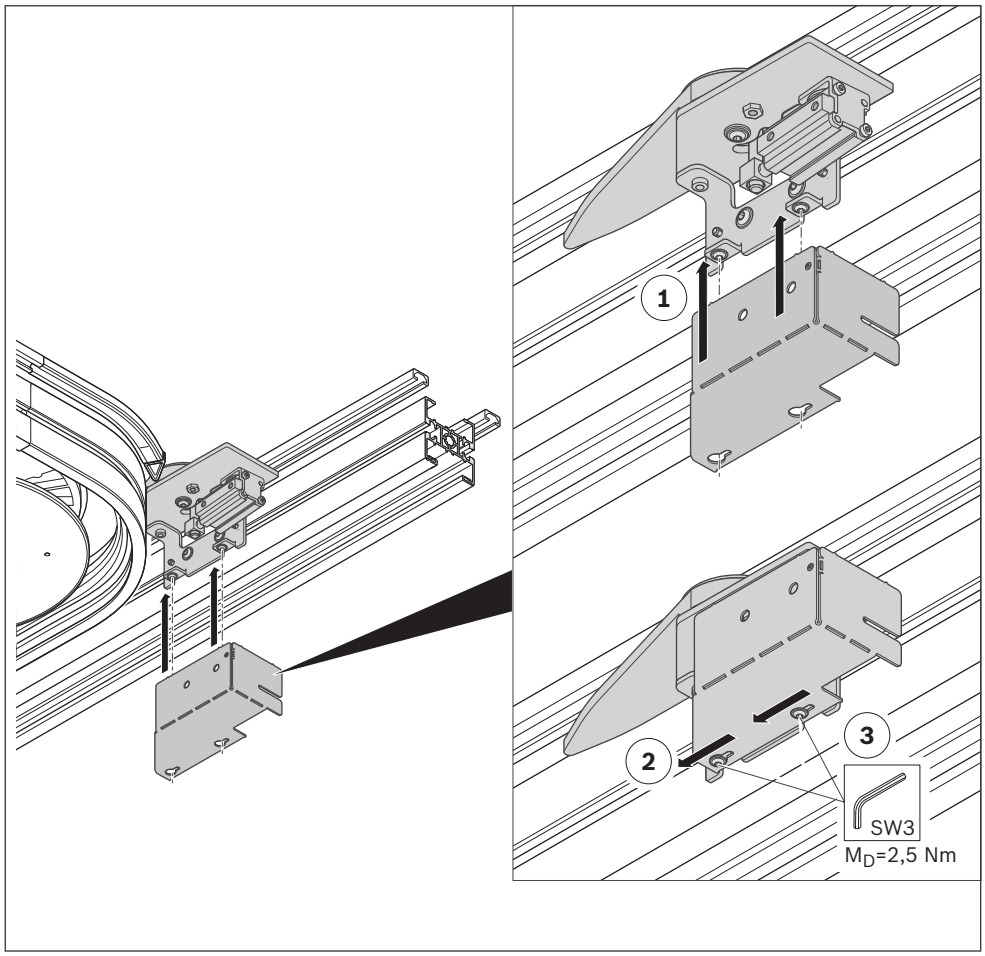

Fig. 133: Workpiece pallet system, diverter kit (5/7)

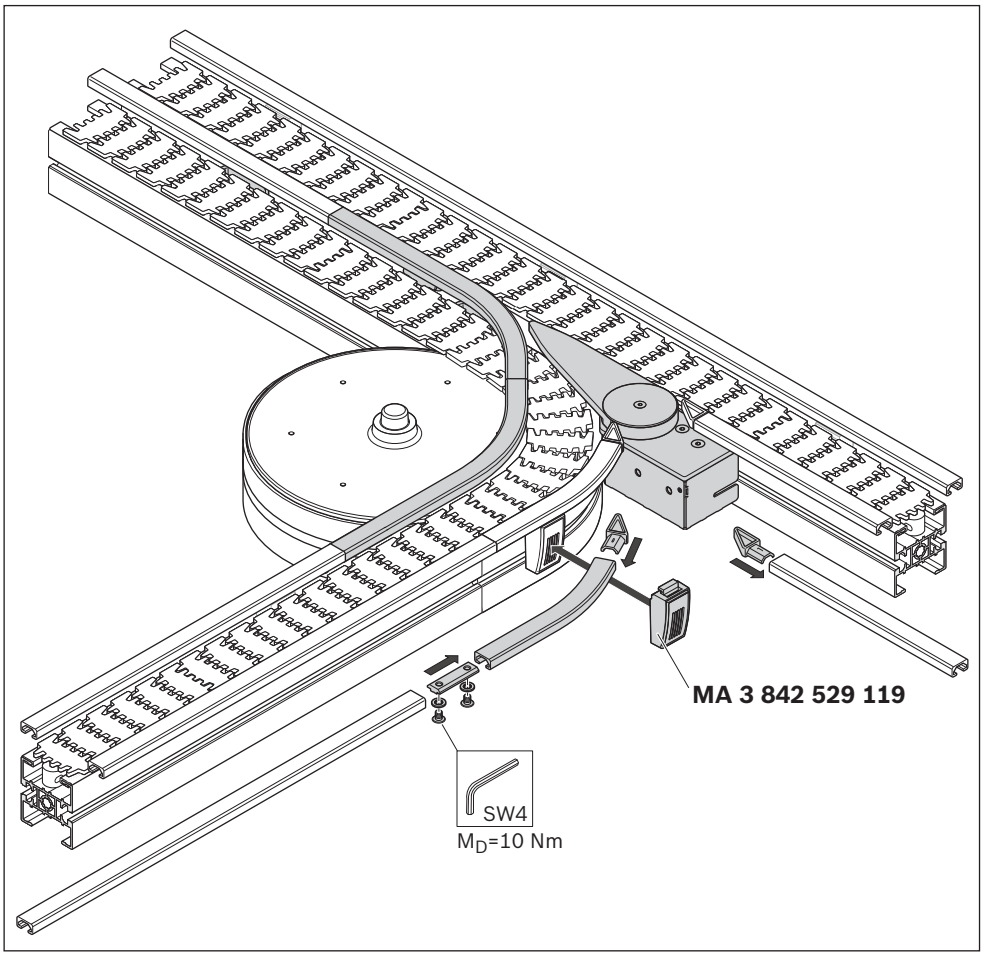

562 411-134

Fig. 134: Workpiece pallet system, diverter kit (6/7)

Only operate the diverter with 2 throttle check valves (G 1/8“, 0 821 200 187) to adjust the swiveling speed of the diverter blade and to cushion the impact on the stop.

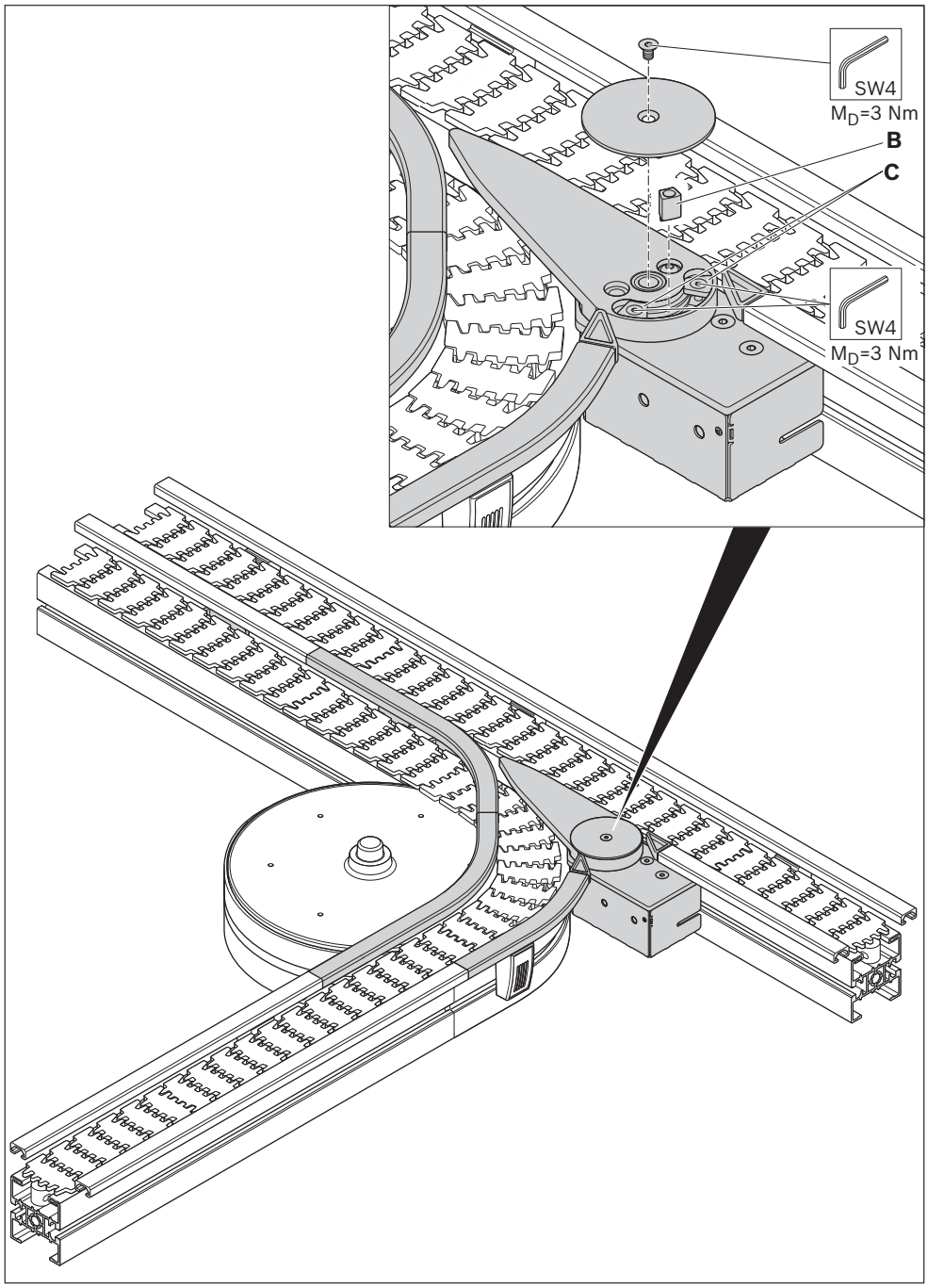

Fig. 135: Workpiece pallet system, diverter kit (7/7)

Required accessories
• Cross-diverter kit (P)

P, VF65,

45°, right:	**3842 551 086**
45°, left:	**3842 551 140**
90°, right:	**3842 551 108**
90°, left:	**3842 551 141**

P, VF90,

45°, right:	**3842 551 084**
45°, left:	**3842 551 139**
90°, right:	**3842 551 074**
90°, left:	**3842 551 138**

Please note:
Safety instructions!
The VarioFlow *plus* WT diverter is intended for steering workpiece pallets in the Rexroth VarioFlow *plus* chain conveyor system.

Cross-diverter kit

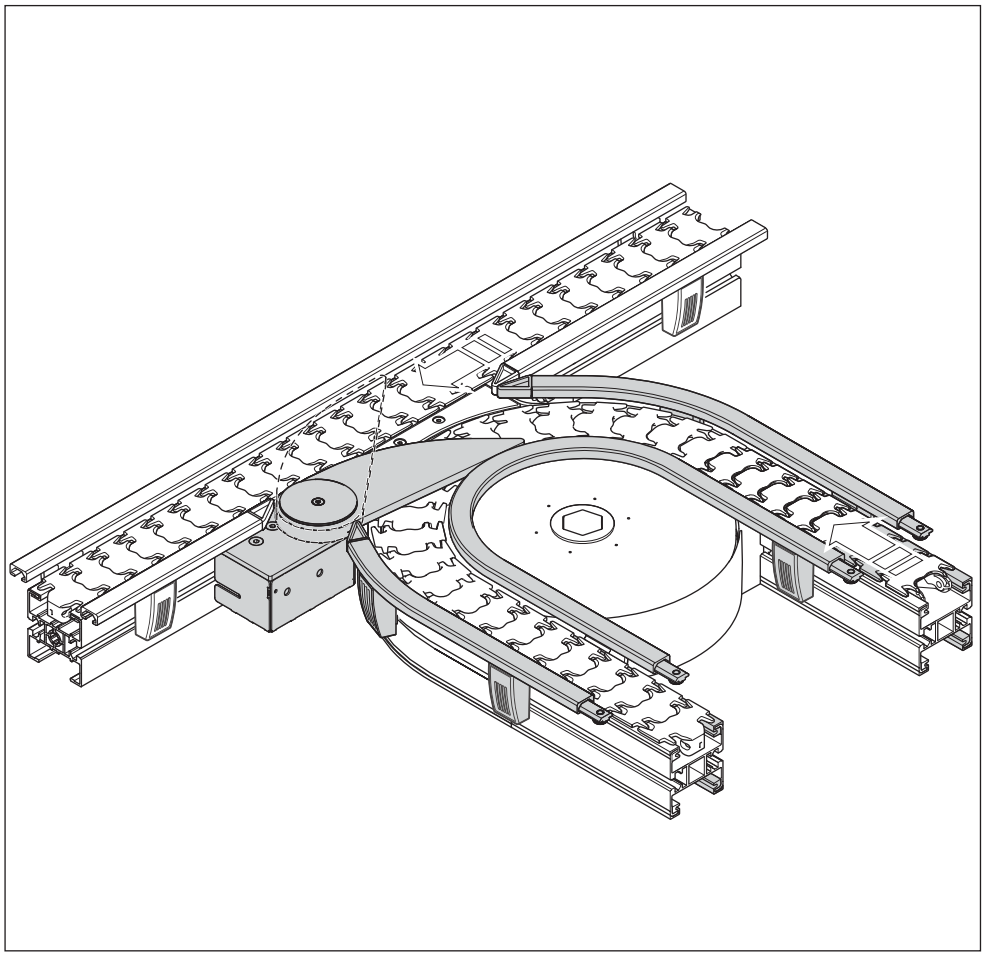

562 411-136

Fig. 136: Workpiece pallet system, cross-diverter kit (1/8)

ENGLISH

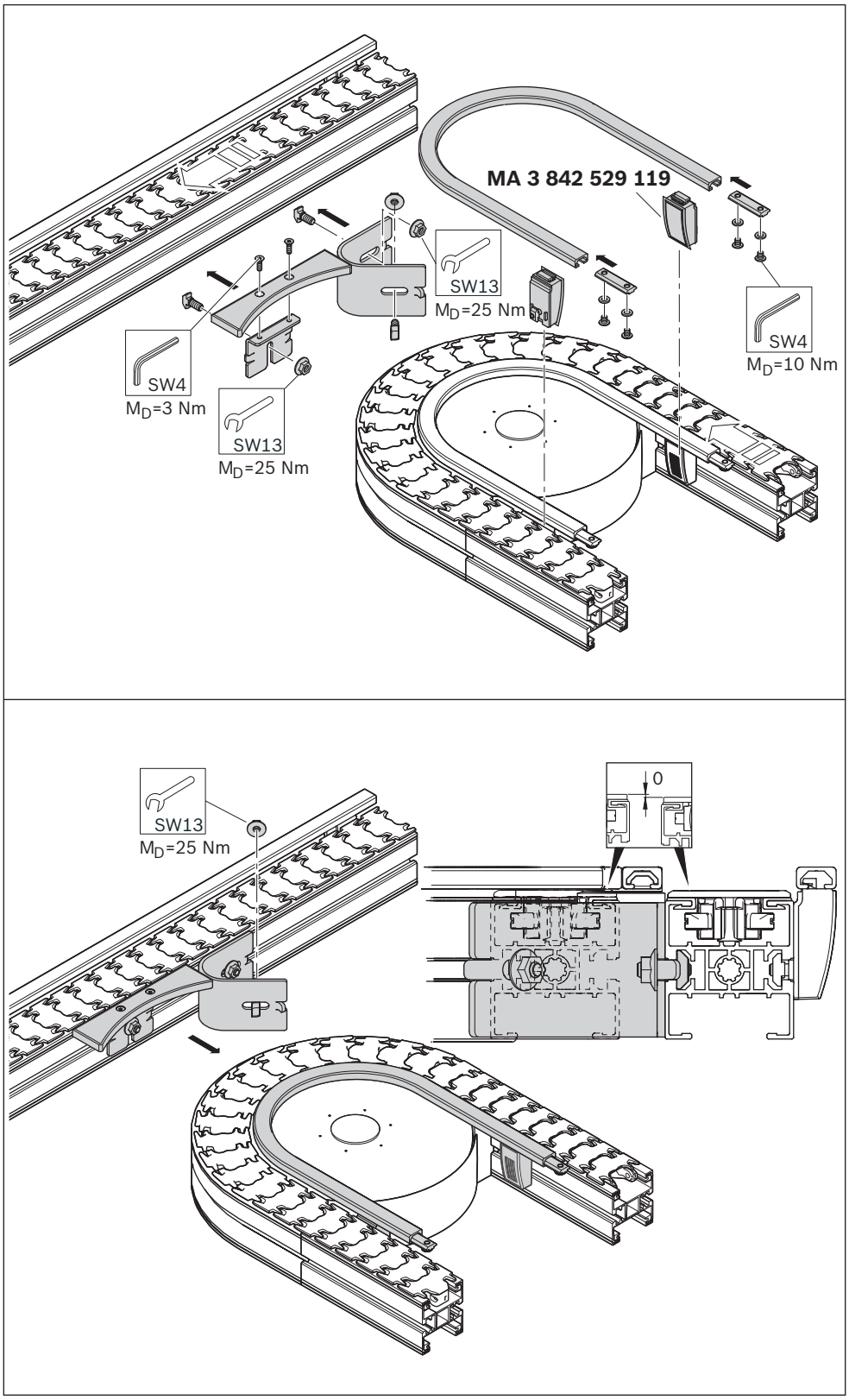

Fig. 137: Workpiece pallet system, cross-diverters 90°

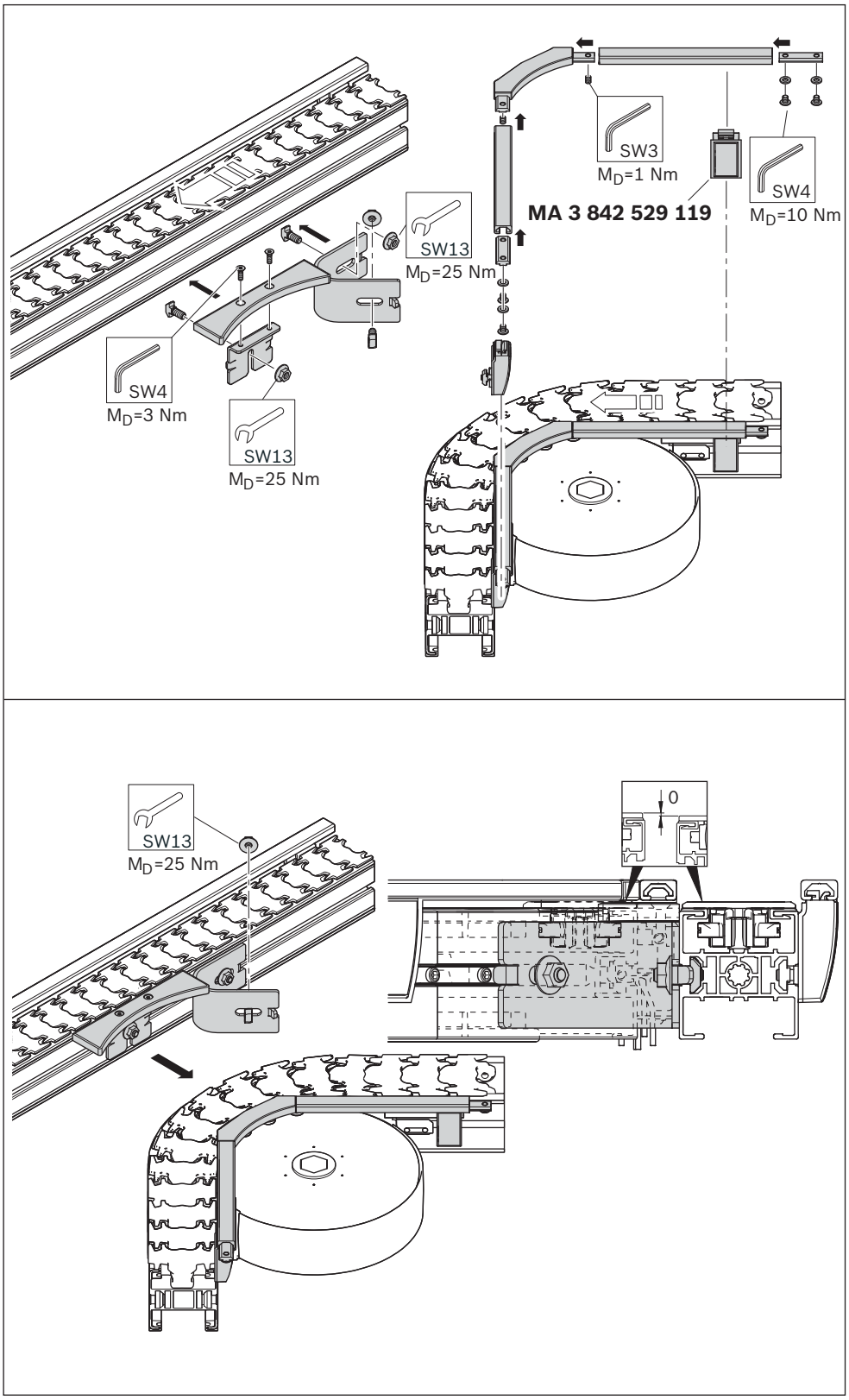

562 411-138

Fig. 138: Workpiece pallet system, cross-diverters 45°

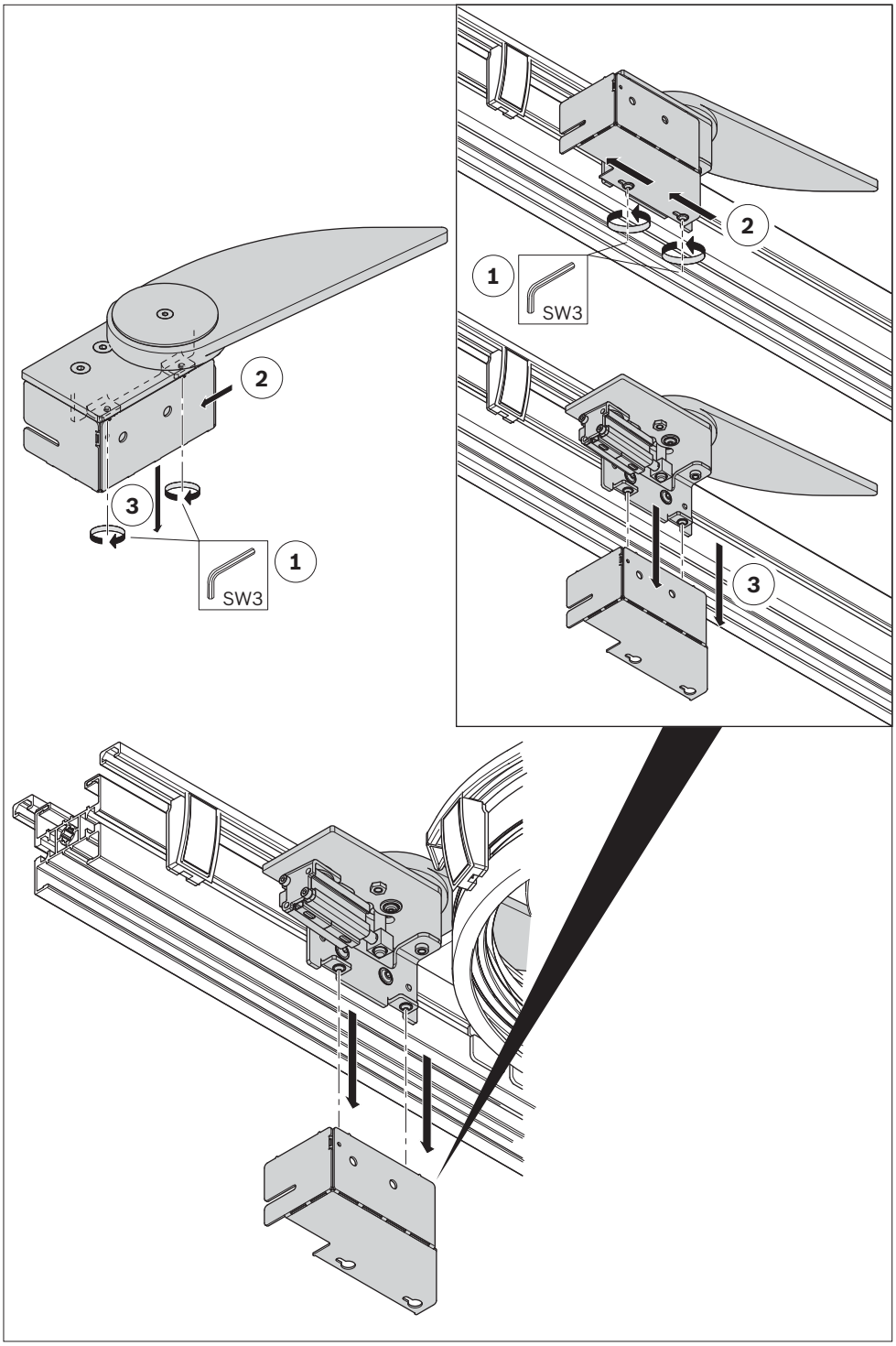

Fig. 139: Workpiece pallet system

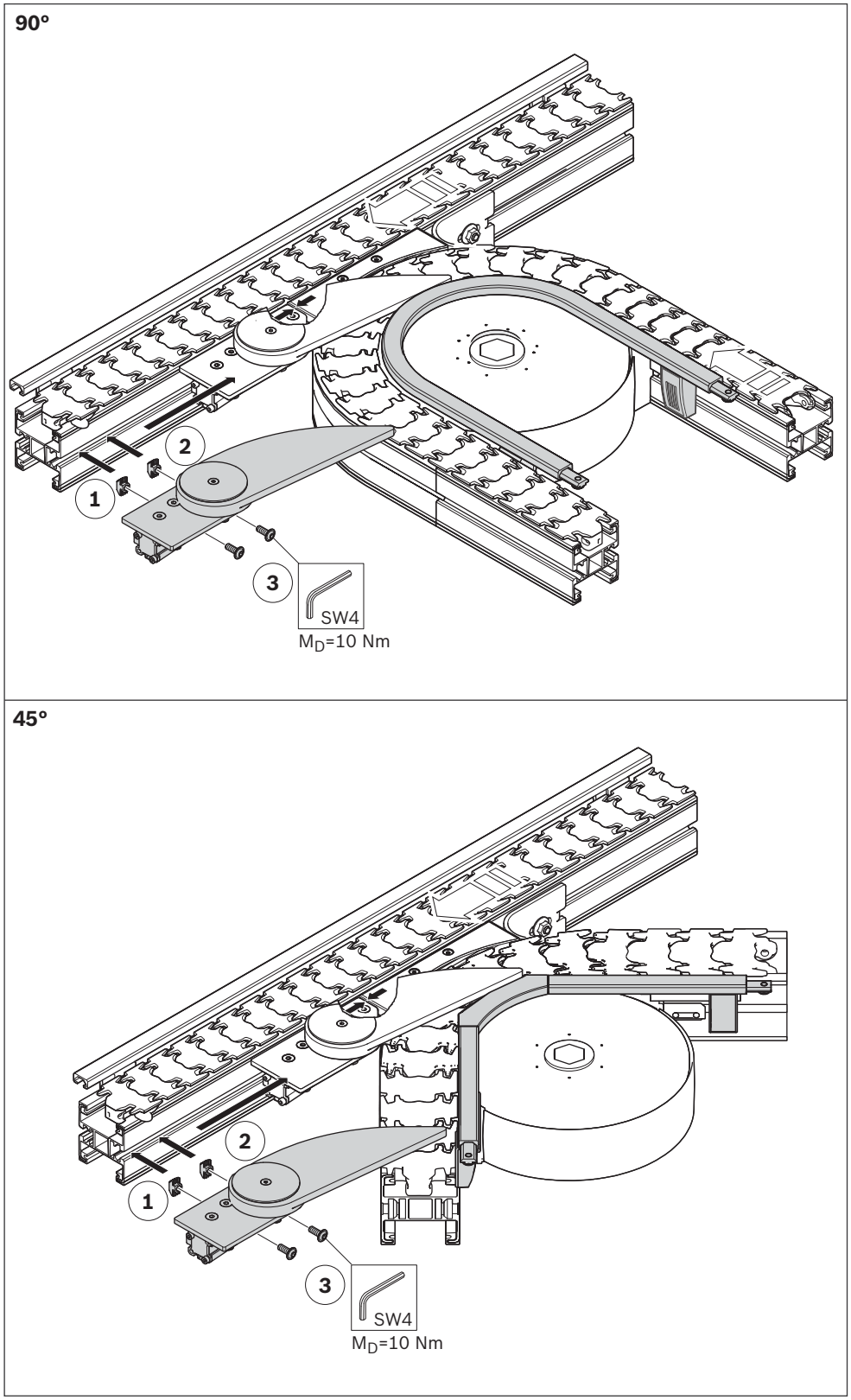

Fig. 140: Workpiece pallet system, cross-diverters 90° (above), cross-diverters 45° (below)

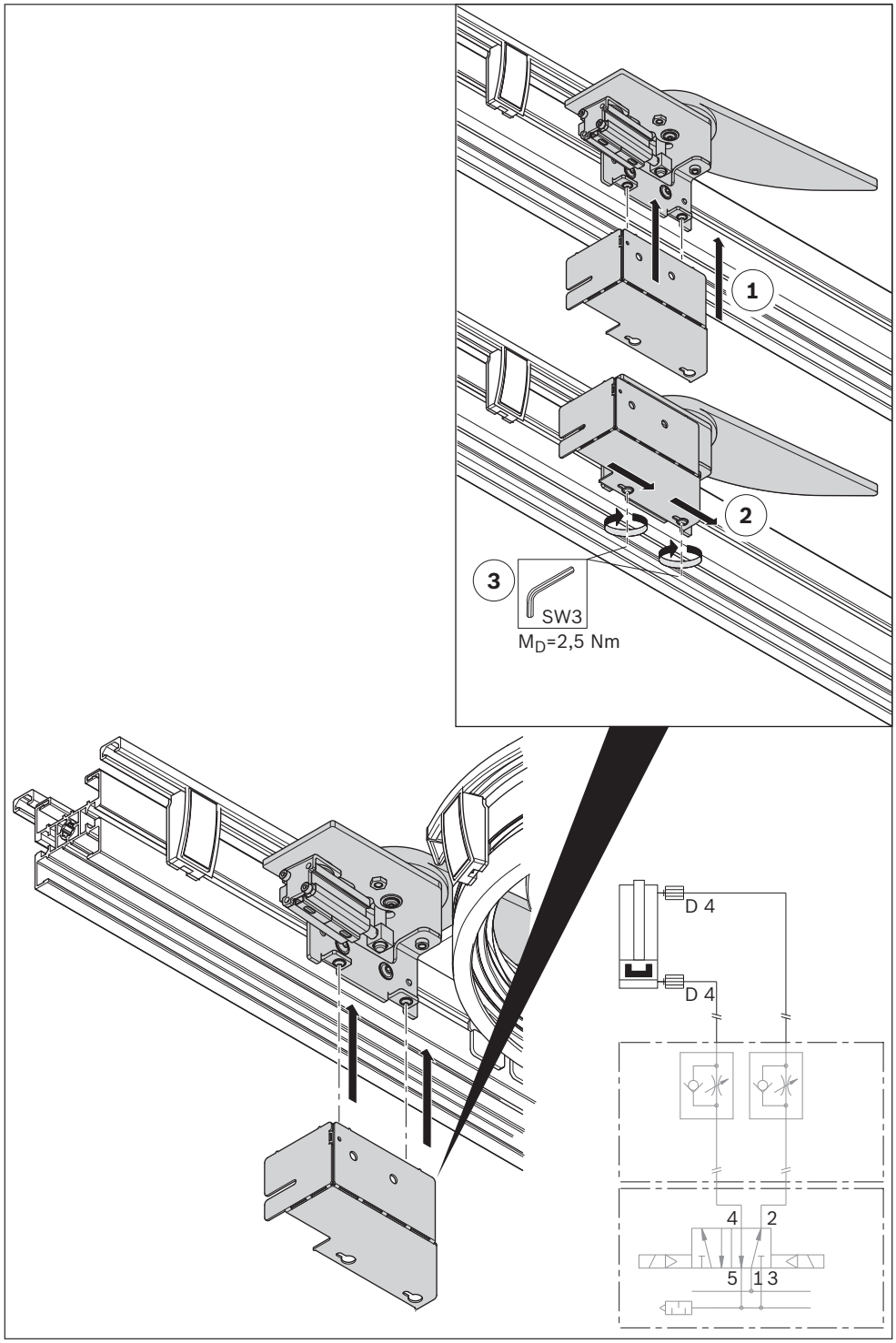

Fig. 141: Workpiece pallet system

--- not included in the scope of delivery

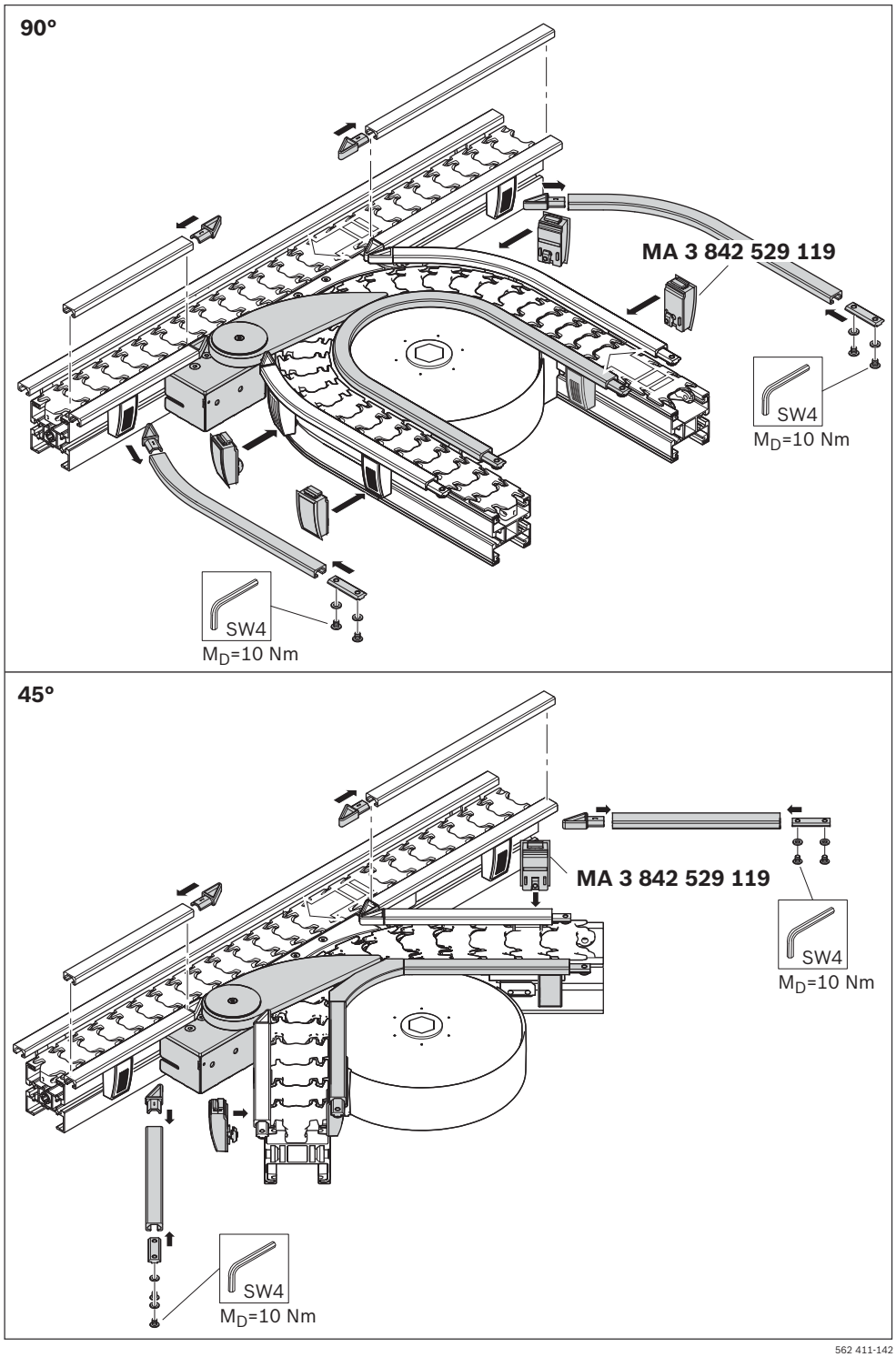

Fig. 142: Workpiece pallet system, cross-diverters 90° (above), cross-diverters 45° (below)

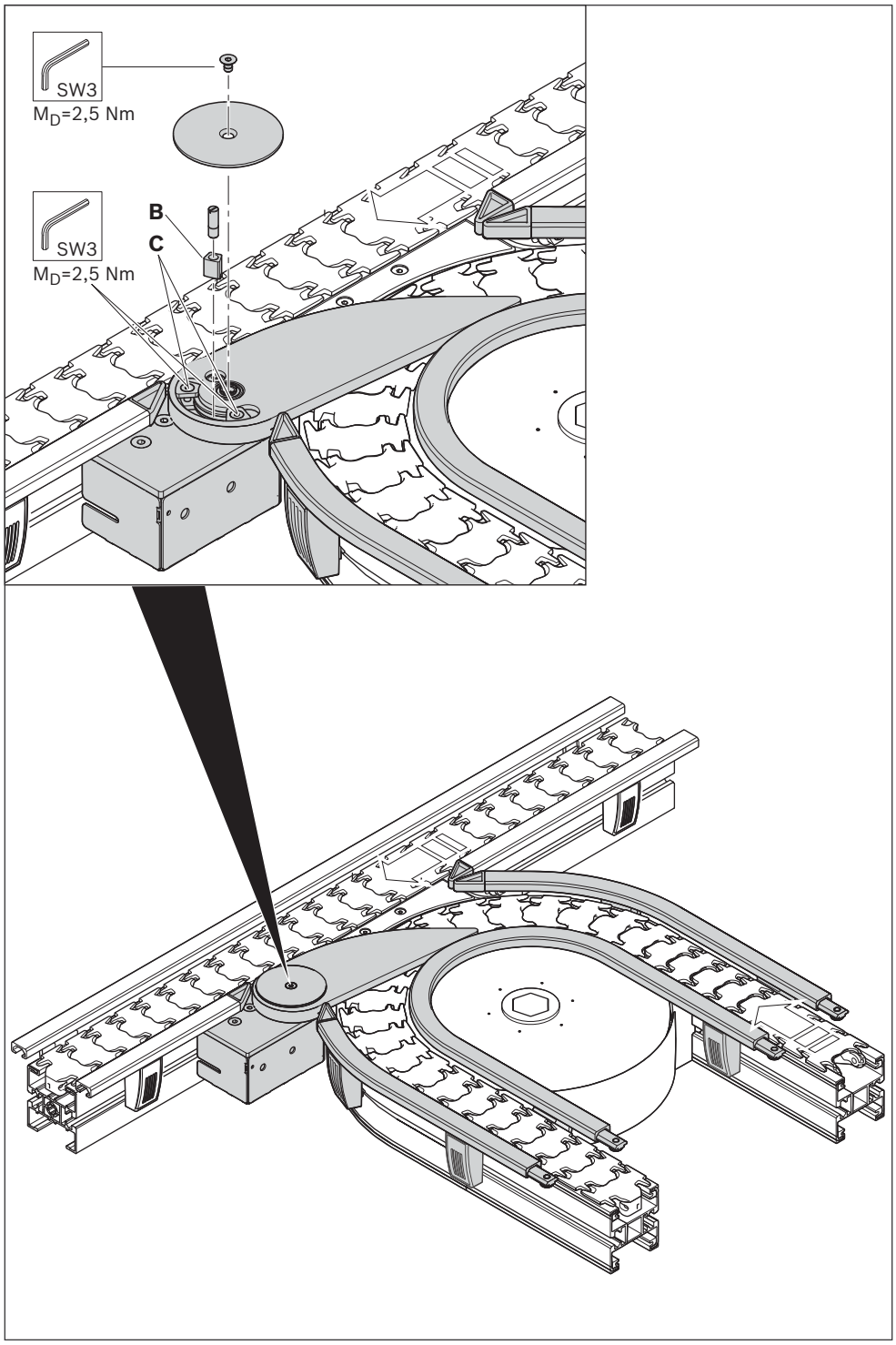

Fig. 143: Workpiece pallet system

Required accessories
• Junction kit (Q)

Q, VF65,	
45°, right/ left:	**3842 551 122**
90°, right:	**3842 551 128**
90°, left:	**3842 551 137**
Q, VF90,	
45°, right/ left:	**3842 551 122**
90°, right:	**3842 551 125**
90°, left:	**3842 551 124**

Please note:
Safety instructions!
The VarioFlow WT junction is intended for steering workpiece pallets in the Rexroth VarioFlow chain conveyor system.

Junction kit

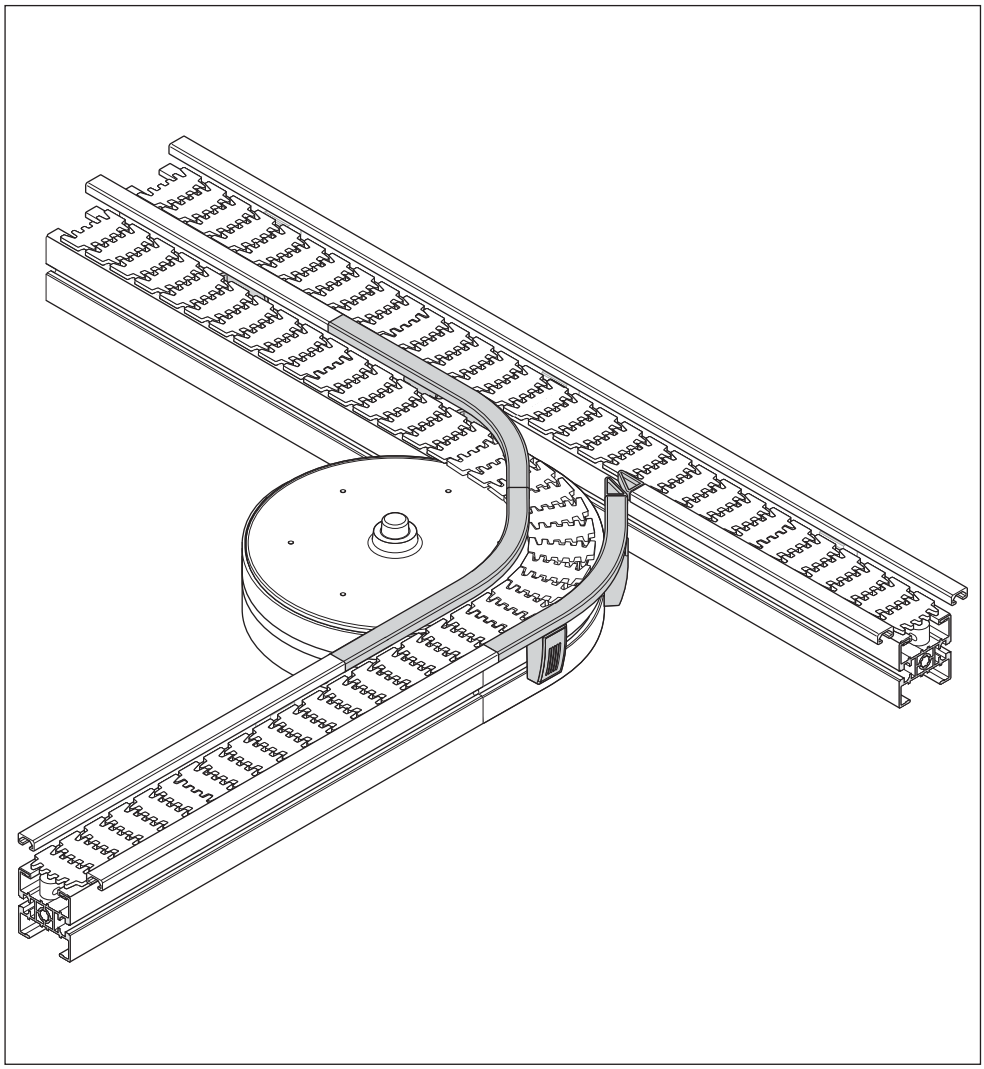

562 411-145

Fig. 144: Workpiece pallet system, junction kit (1/3)

ENGLISH

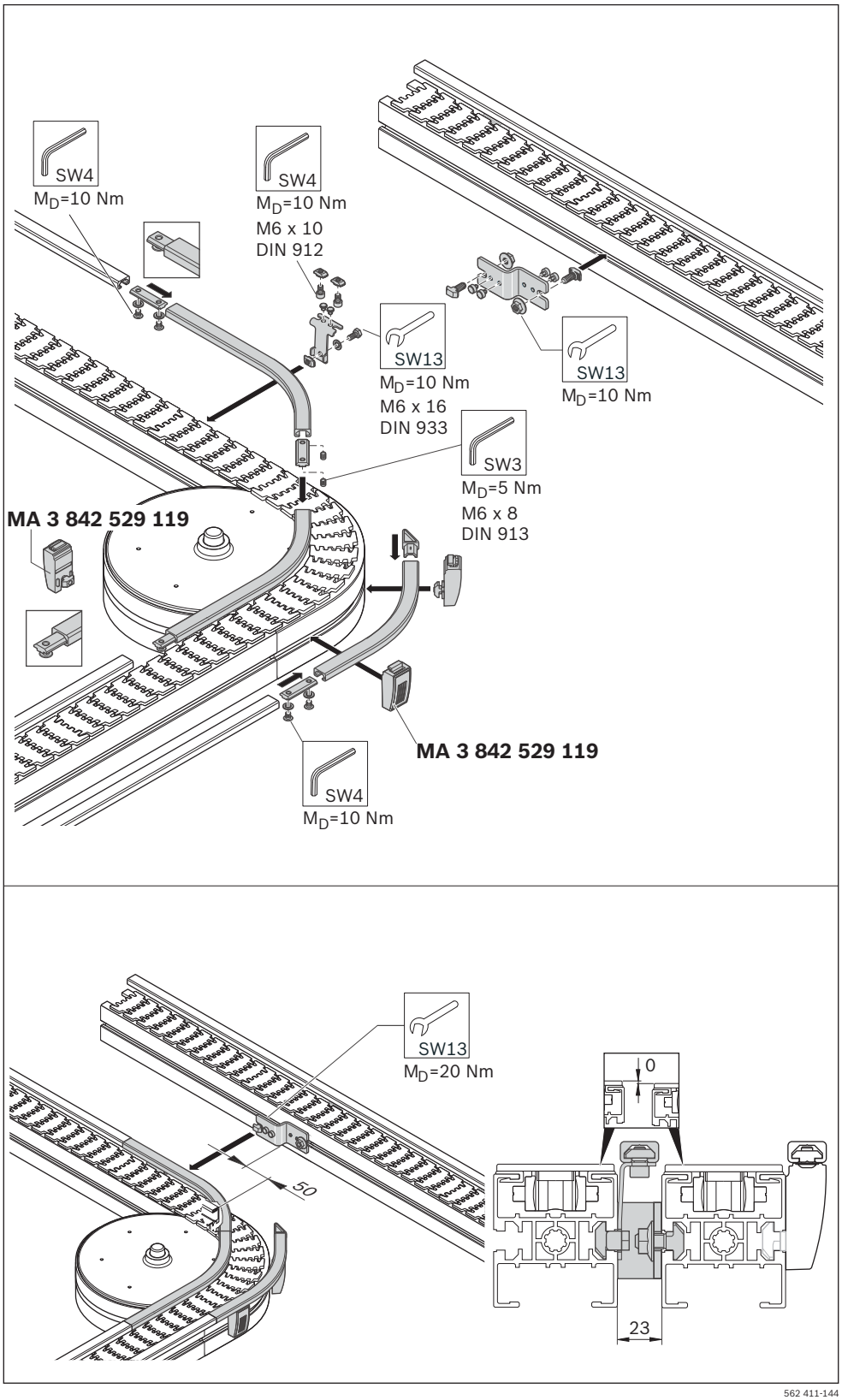

Fig. 145: Workpiece pallet system, junction kit (2/3)

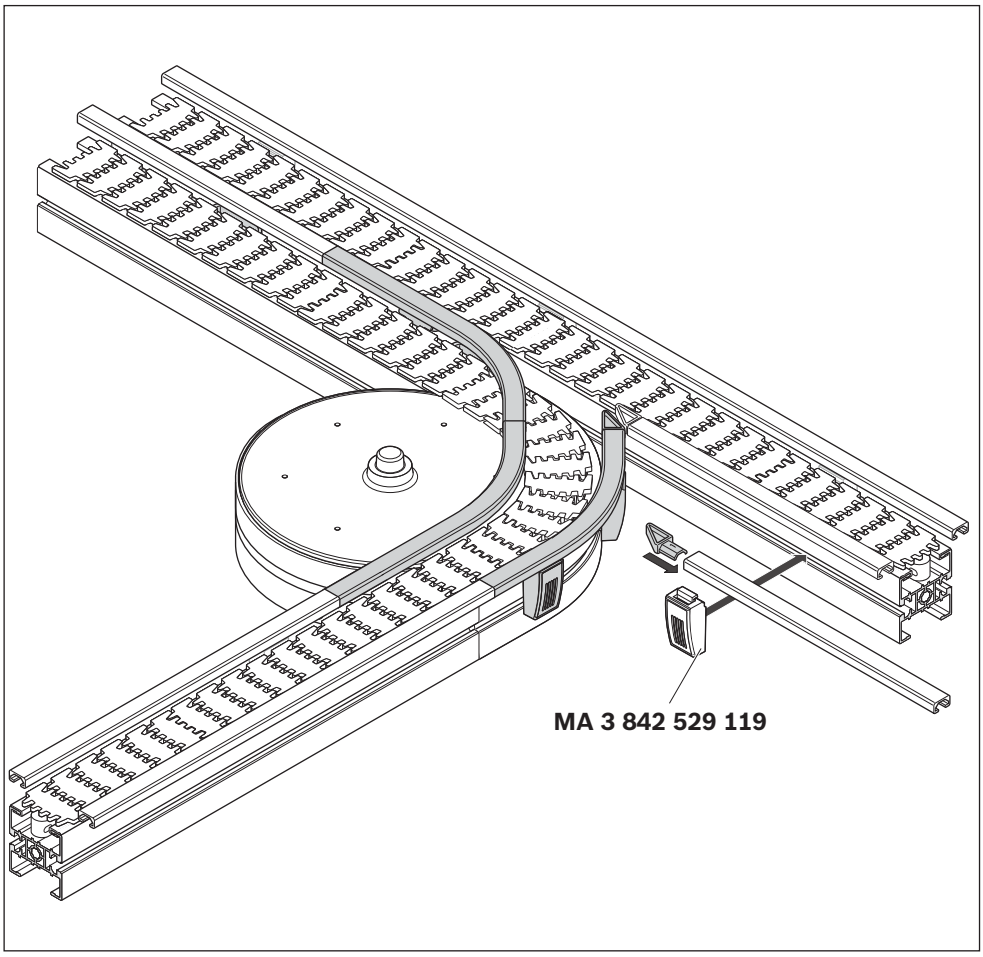

562 411-146

Fig. 146: Workpiece pallet system, junction kit (3/3)

Rocker

Required accessories
• Rocker (R)

R: **3842 547 464**

Please note:
Intended use:
area monitoring for workpiece pallets in the Rexroth VarioFlow *plus* transfer system.
Electrical connections according to the relevant national regulations. For Germany: VDE regulation VDE 0100!

Scope of delivery
• Rocker, ready to assemble.
• Assembly kit (in PE bag)

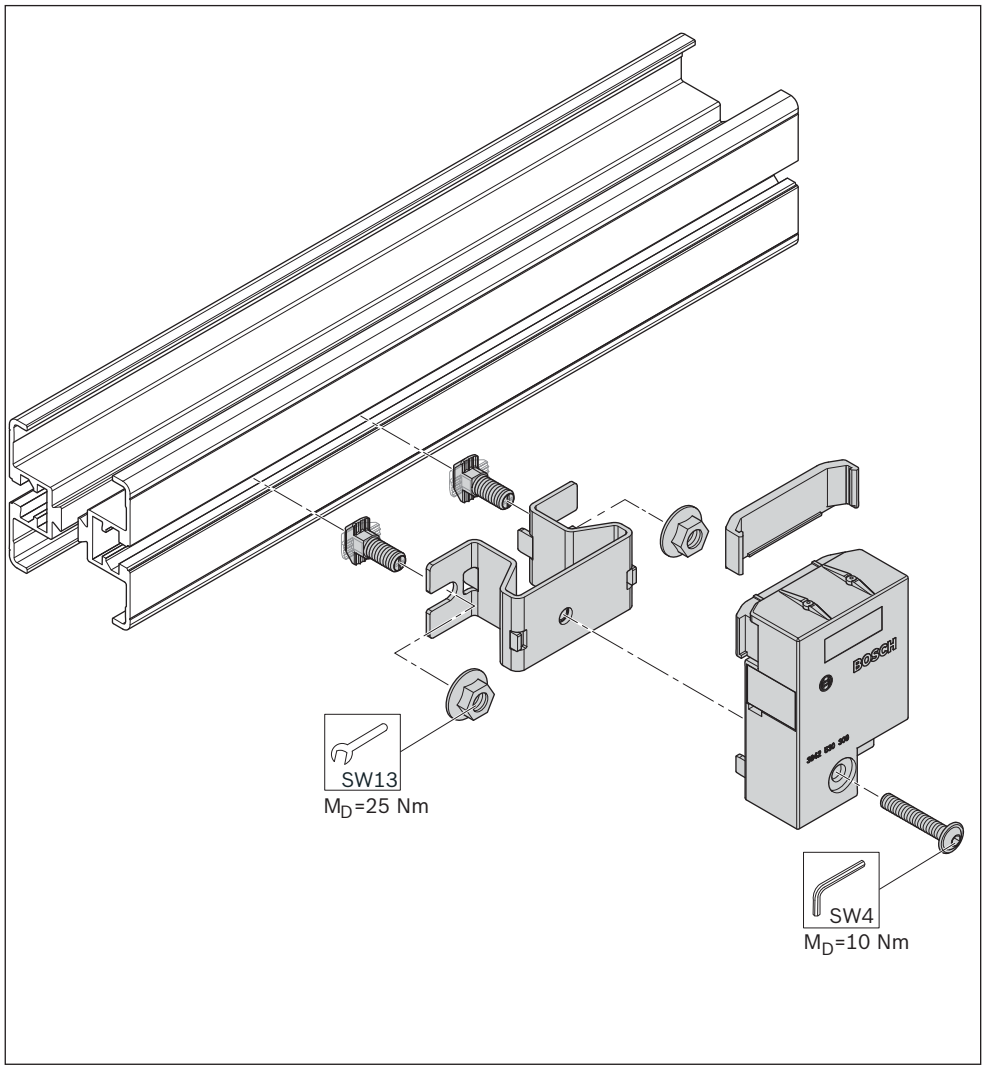

562 411-147

Fig. 147: Workpiece pallet system, rocker (1/3)

Use with sensor

For area monitoring on transfer systems. The spring-mounted rocker switch enables the mechanical detection of workpiece pallets.
The metal element in the rocker switch enables a query to be made via an M12x1.5 mm sensor with a switching distance of 4 to 6 mm.
The retaining bore and headless setscrew for fixing the rocker in place are available on site.

1. Loosen the headless setscrew.
2. Push the sensor all the way into the bore.
3. Fix the sensor in place with the headless setscrew.
   Max. tightening torque 2 Nm!

Mode of operation:
rocker activated -> sensor dampened

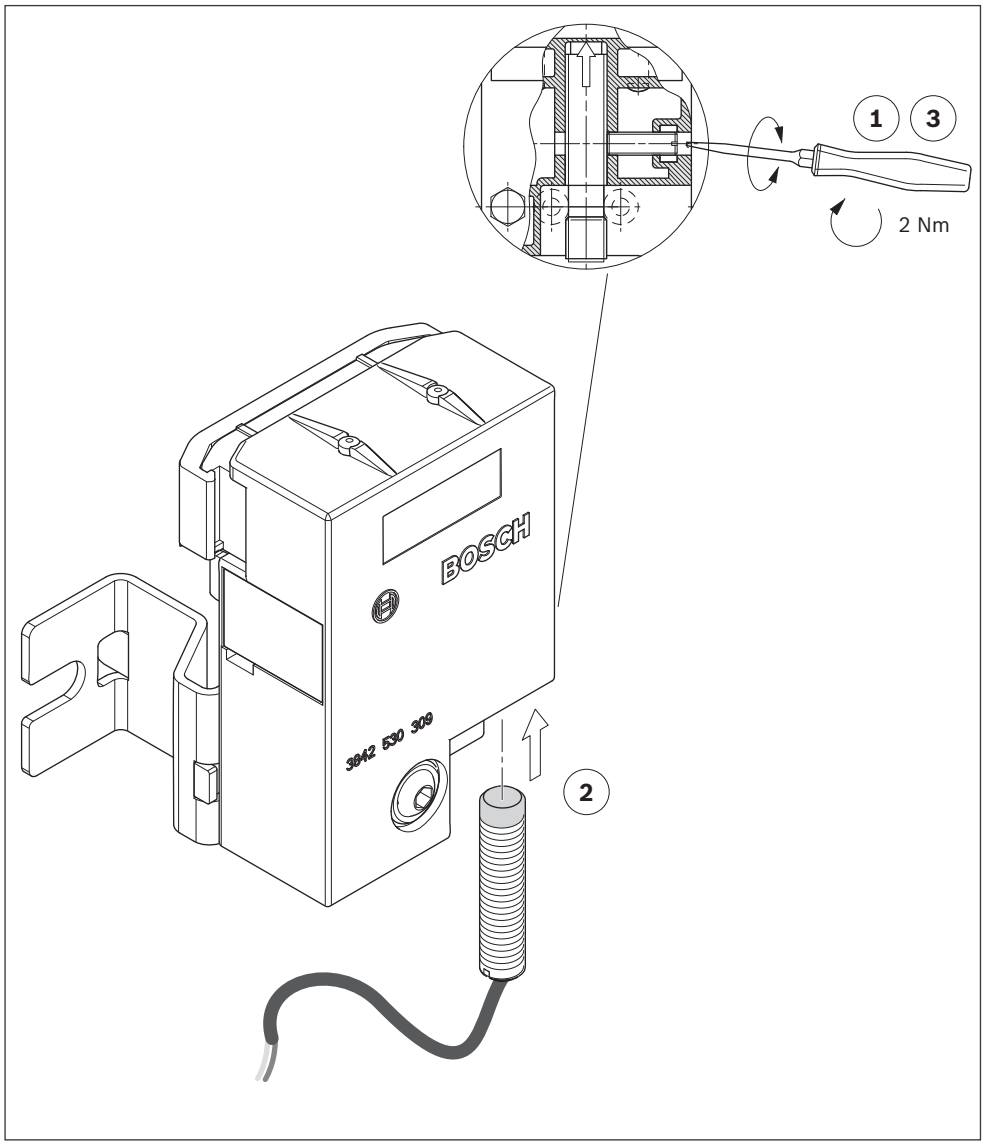

562 411-148

Fig. 148: Workpiece pallet system, rocker (2/3)

ENGLISH

Use with a pneumatic switch

The pneumatic switch (3 842 532 151) directly converts the actuation of the rocker into a pneumatic signal.
Simple, purely pneumatic accumulation pressure regulation can be established in conjunction with a pneumatic stop gate.

1. Remove the cover.
2. Push the pneumatic switch all the way into the recess.
3. Fix the pneumatic switch in place with the screw.
   Max. tightening torque 1.5 Nm!

Mode of operation:
rocker not activated
-> pneumatic switch dampened

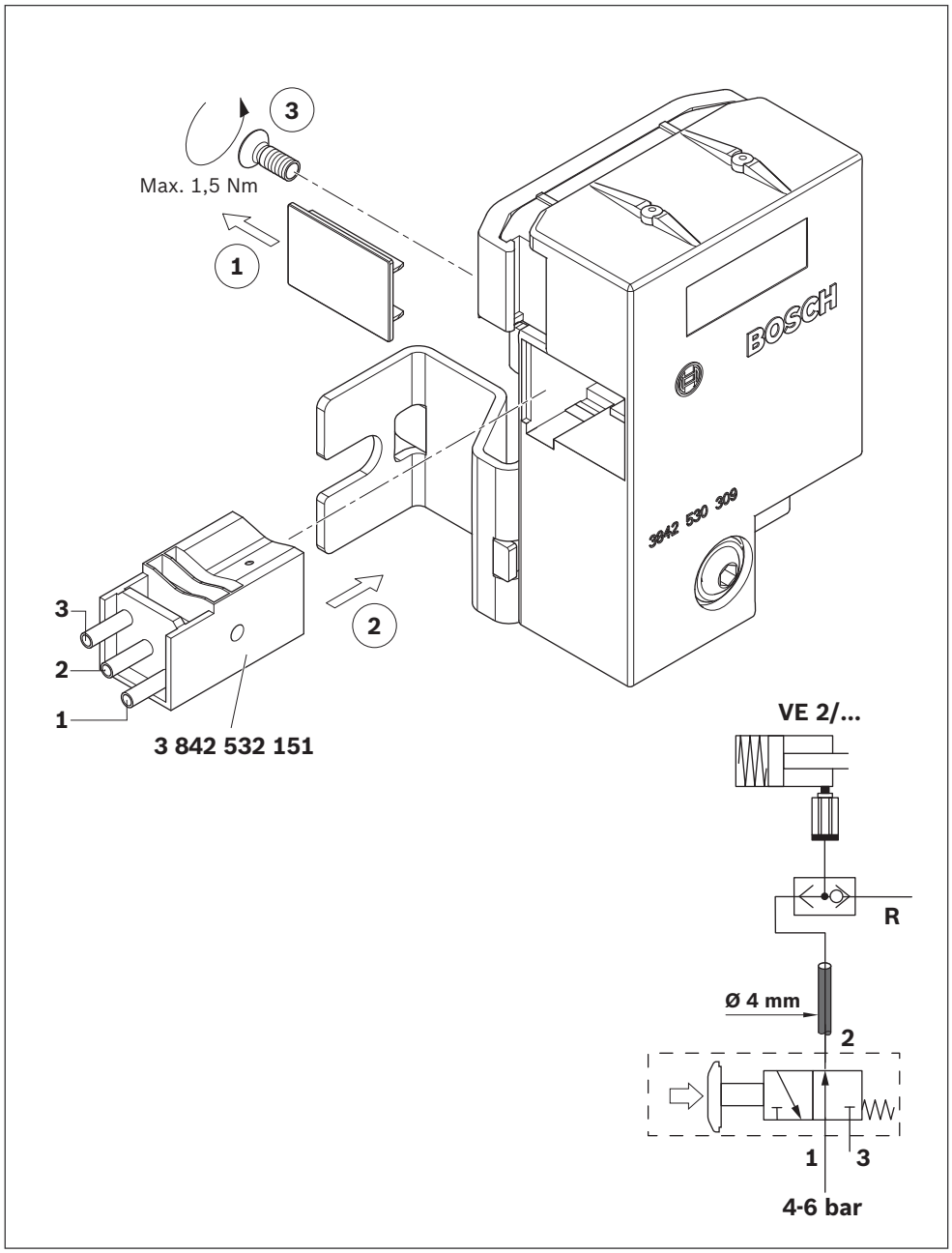

Fig. 149: Workpiece pallet system, rocker (3/3)

7.5.4 Gear motor

Basic unit, AL system, gear motor GM = 1 installation

Required accessories
- Drive kit without (A) or with (B) safety coupling.

A/B: **3842 998 291**

Please note:
The VarioFlow *plus* modules are not designed for reversible operation. Make the gear motor electrical connections **before** carrying out installation (see page 87), and check the rotational direction!

▶ Install the gear motor.

For adjusting the release torque of the safety coupling, see page 169.

[1]) Size shown
[2]) Flange can only be installed in the correct position (with opening facing downwards).
[3]) Cover cap is included in the basic unit's scope of delivery

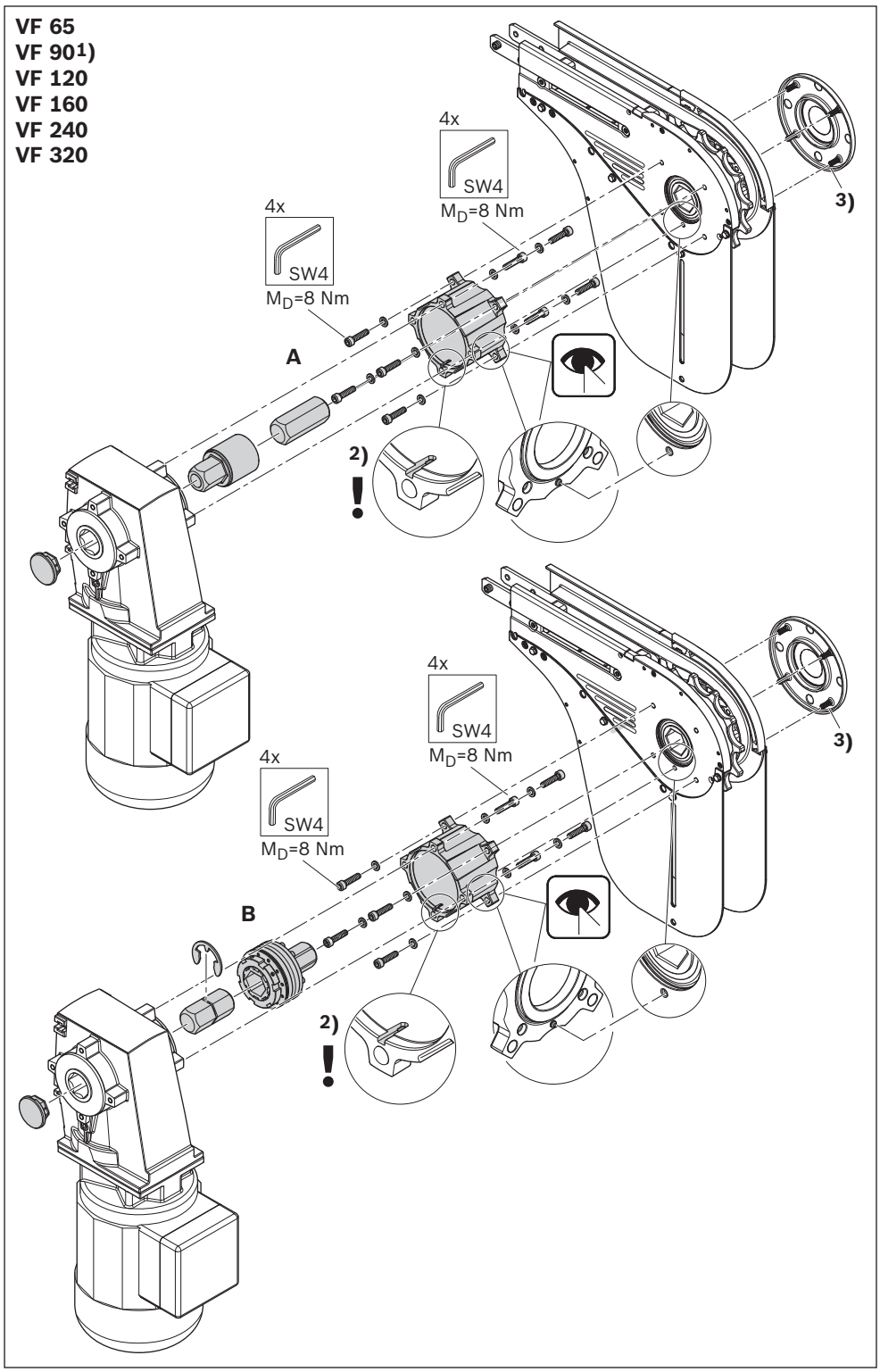

Fig. 150: Basic unit, AL system, gear motor GM = 1 installation

ENGLISH

Required accessories
- Drive kit without (A) or with (B) safety coupling.

A/B: **3842 998 291**

Please note:
The VarioFlow *plus* modules are not designed for reversible operation. Make the gear motor electrical connections **before** carrying out installation (see page 87), and check the rotational direction!

▶ Install the gear motor.

For adjusting the release torque of the safety coupling, see page 169.

[1]) Size shown
[2]) Flange can only be installed in the correct position (with opening facing downwards).
[3]) Cover cap is included in the basic unit's scope of delivery

Basic unit, AL system, gear motor GM = 2 installation

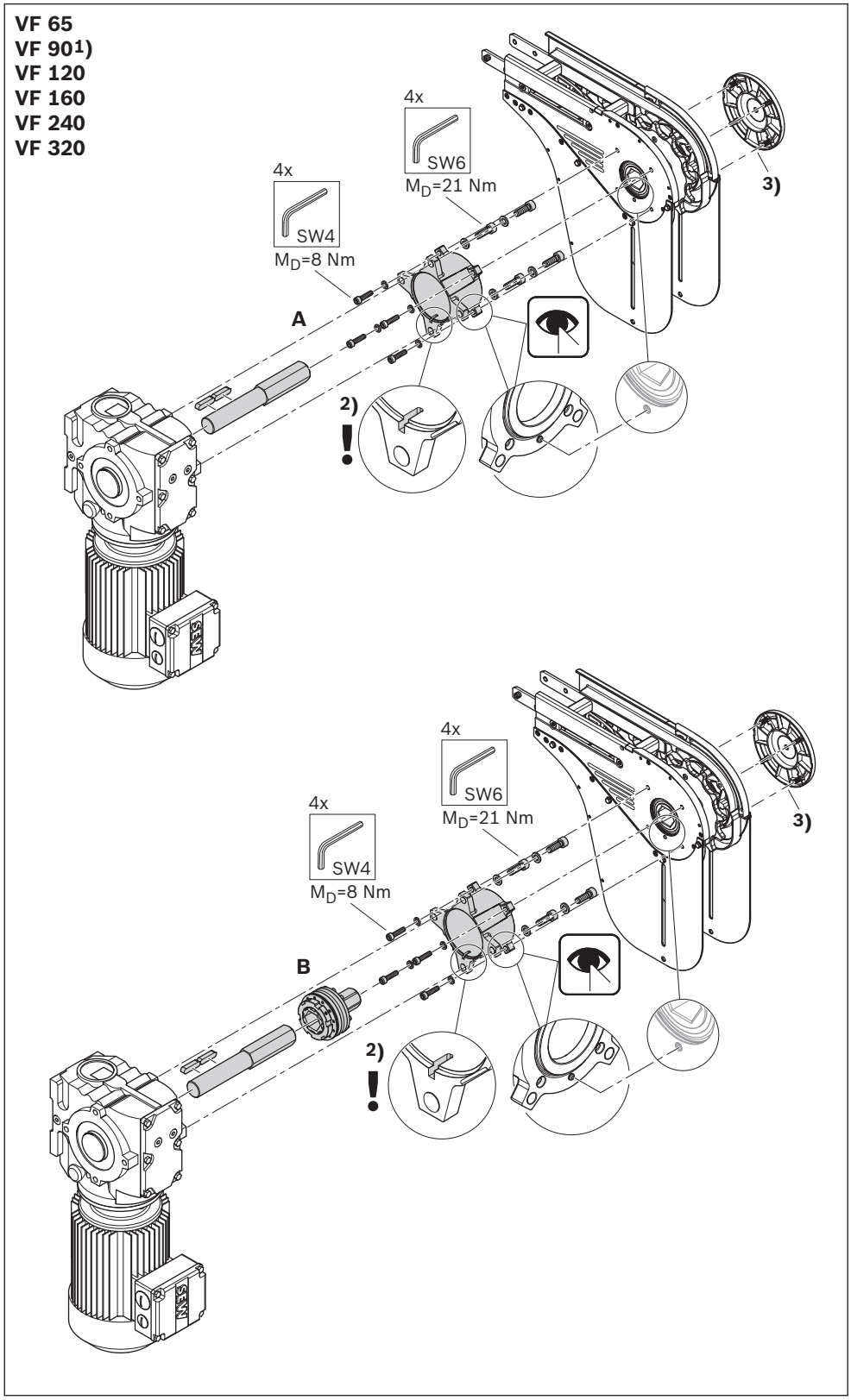

Fig. 151: Basic unit, AL system, gear motor GM = 2 installation

Required accessories
• Drive kit

3842 998 291

Please note:
The VarioFlow *plus* modules are not designed for reversible operation. Make the gear motor electrical connections **before** carrying out installation (see page 87), and check the rotational direction!

▶ Install the gear motor.

[1]) Size shown
[2]) Cover cap is included in the basic unit's scope of delivery

Basic unit, STS system, gear motor installation

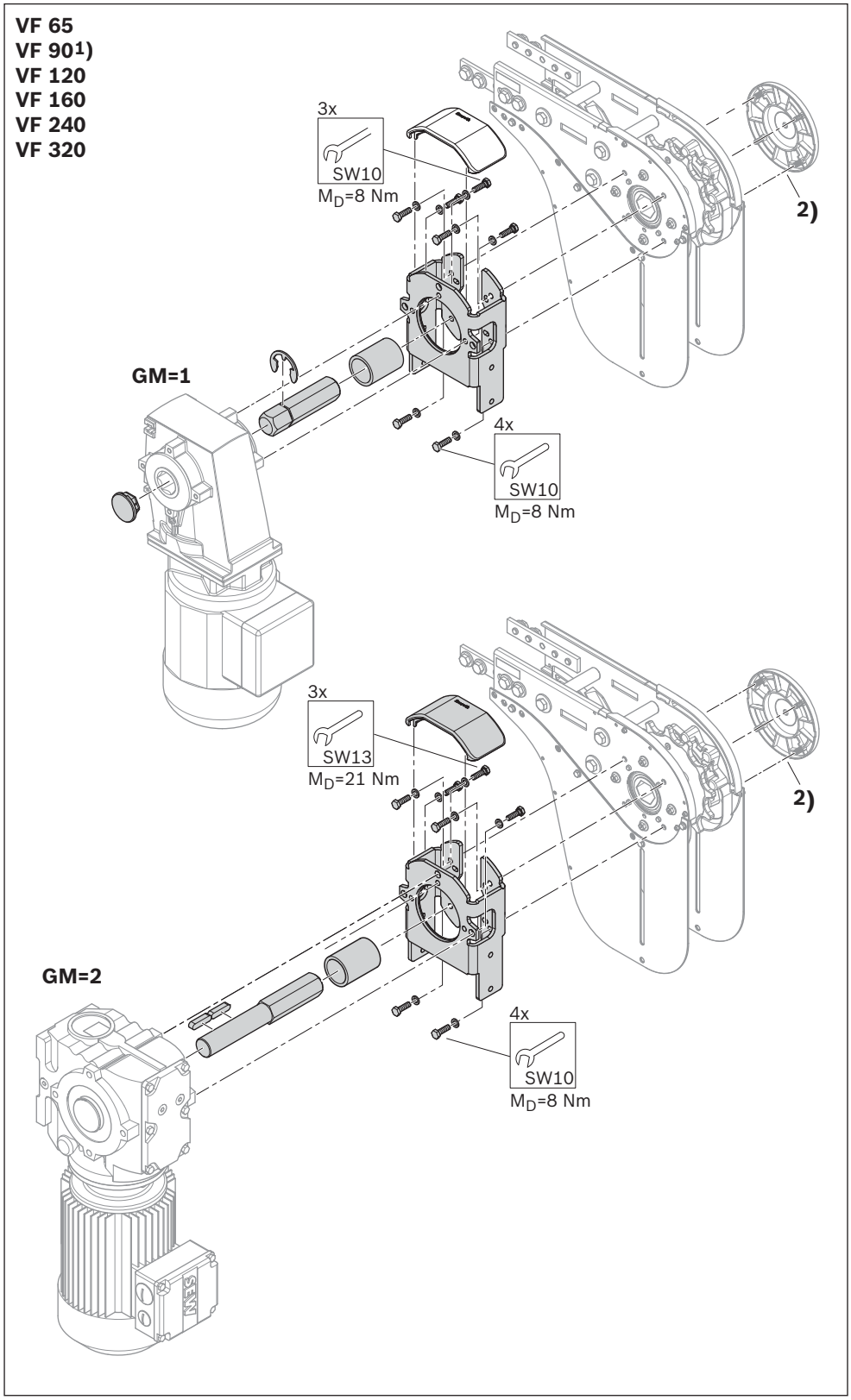

Fig. 152: Basic unit, STS system, gear motor installation

ENGLISH

Required accessories
- Drive kit without (A) or with (B) safety coupling.

A/B: **3842 998 291**

Please note:
The VarioFlow *plus* modules are not designed for reversible operation. Make the gear motor electrical connections **before** carrying out installation (see page 87), and check the rotational direction!

▶ Install the gear motor.

For adjusting the release torque of the safety coupling, see page 169.

[1]) Size shown

Center drive, AL /STS system, gear motor GM = 1 installation

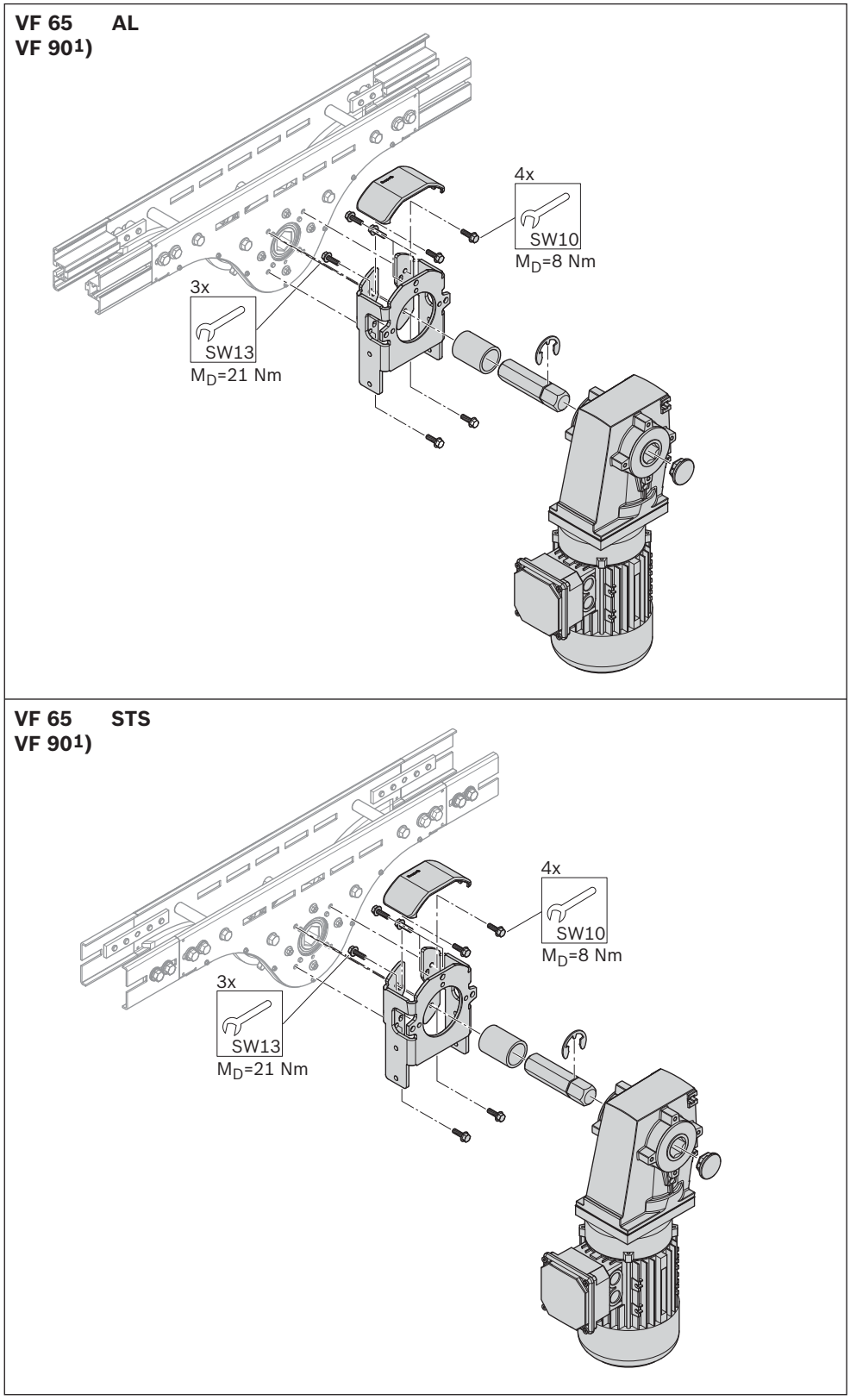

Fig. 153: Center drive, AL /STS system, gear motor GM = 1 installation

Required accessories
- Transmission drive (C)

C: 3842 998 291

1. Remove the cover of the transmission drive.
2. Remove the guard plate behind the transmission drive.
3. Install the transmission drive on the leg set and the basic unit.

[1]) Size shown
[2]) Transmission shown on left

Transmission drive, AL system, gear motor GM = 1 installation

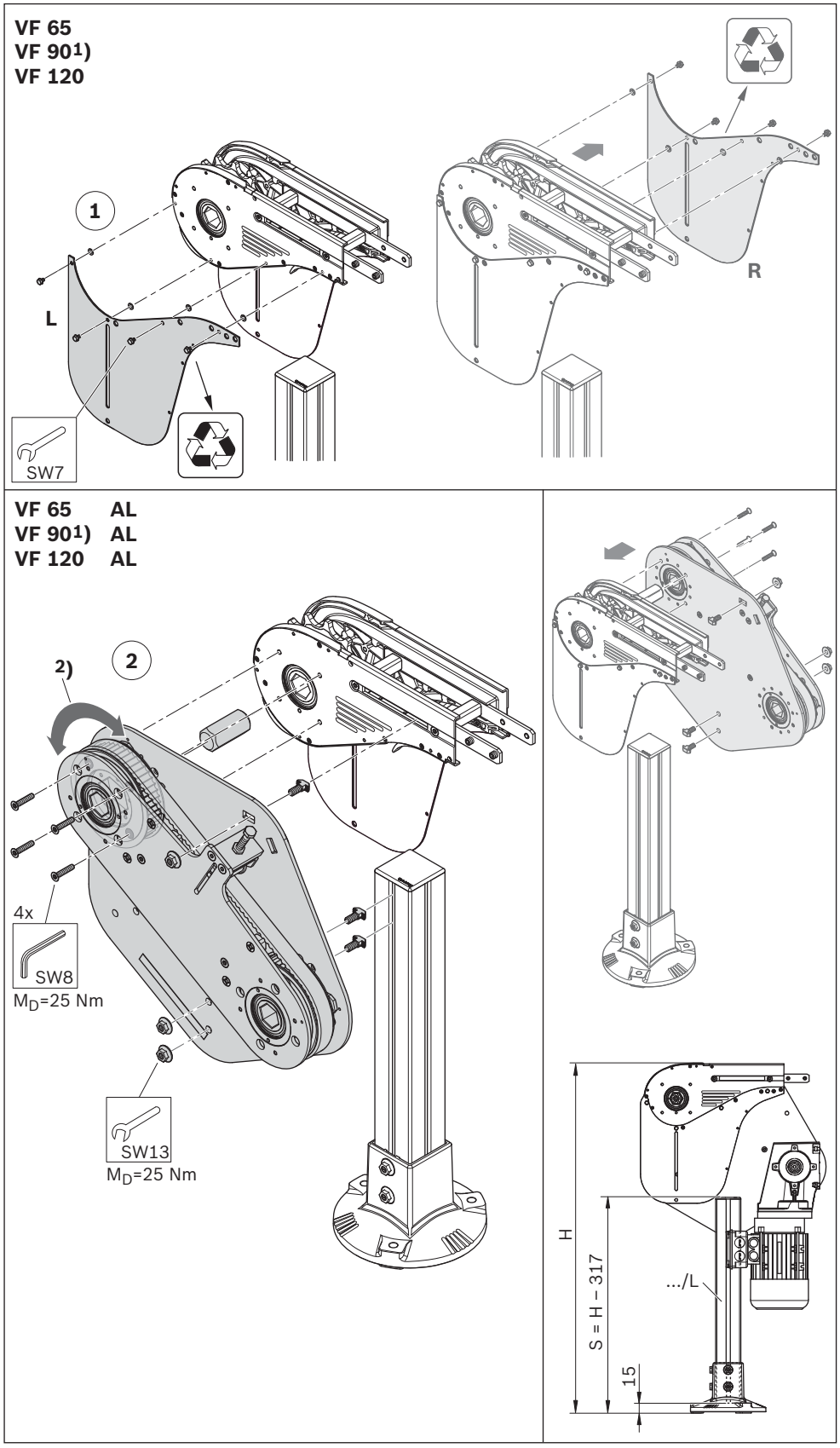

Fig. 154: Transmission drive, AL system, gear motor GM = 1 installation (1/2)

ENGLISH

Extending the adapter-transmission kit VF 160 / VF 320

Required accessories

- Adapter-transmission kit (D)

D: 3842 559 108

1. Fix the adapter plates on the side plate.
2. Insert the long shaft.
3. Install the transmission kit.

[1]) Size shown

[2]) Transmission shown on left

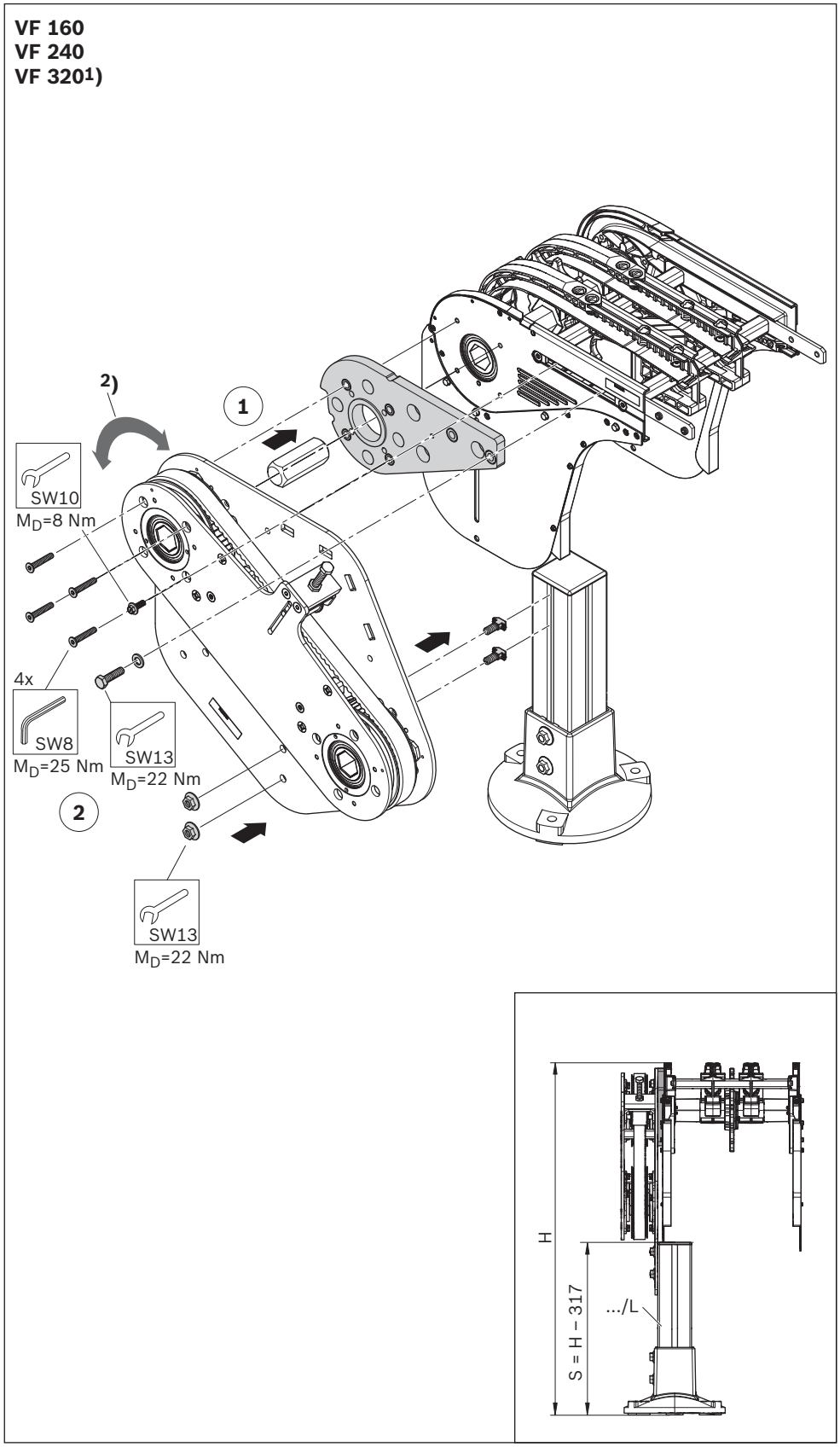

Fig. 155: Installing the adapter-transmission kit

Please note:
The VarioFlow *plus* modules are not designed for reversible operation. Make the gear motor electrical connections **before** carrying out installation (see page 87), and check the rotational direction!

4. Install the gear motor. For adjusting the release torque of the safety coupling, see page 169.
5. Install the cover of the transmission drive.

[2]) Flange can only be installed in the correct position (with opening facing downwards).
[3]) basic unit scope of delivery

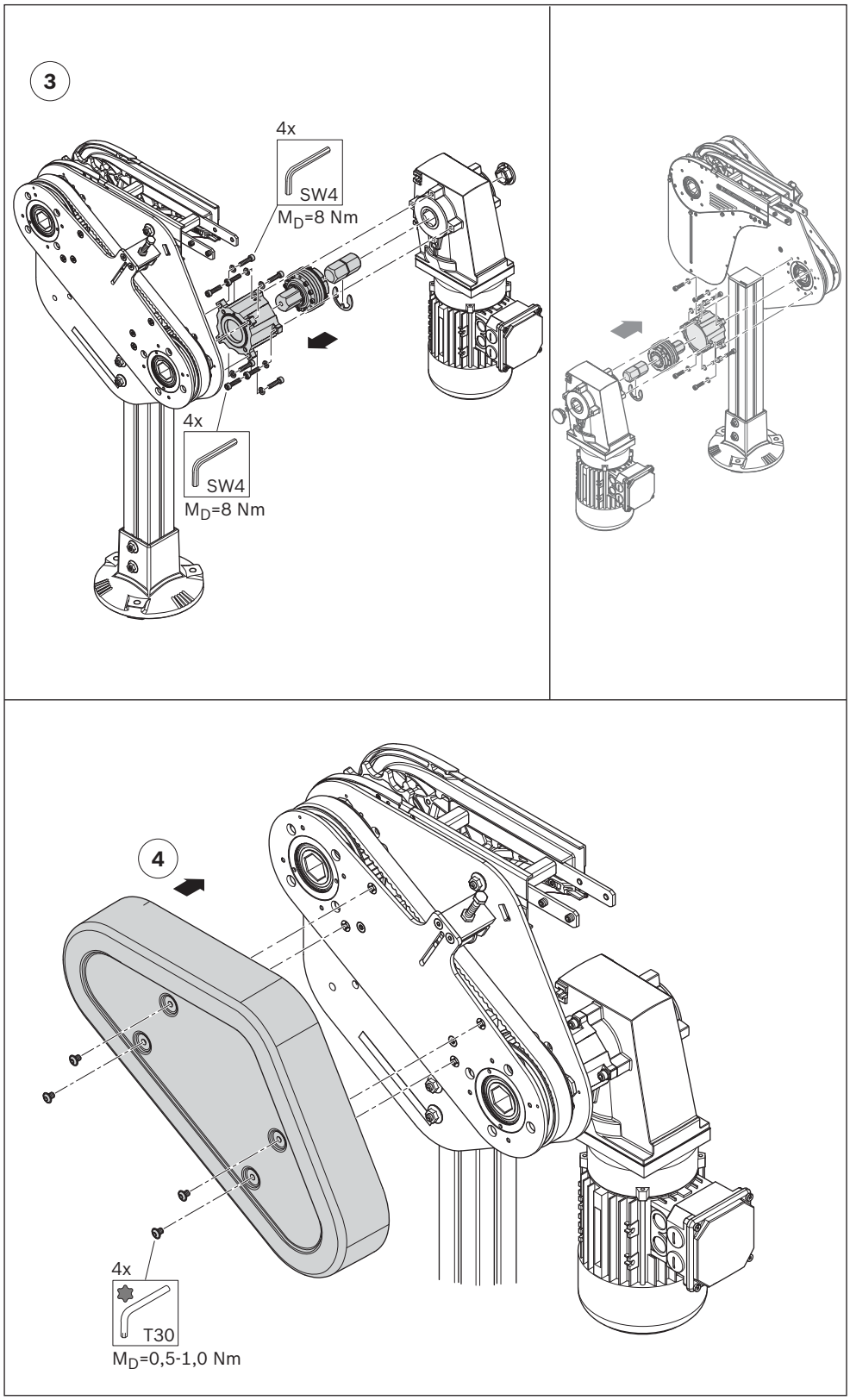

Fig. 156: Transmission drive, AL system, gear motor GM = 1 installation (2/2)

ENGLISH

Required accessories
• Drive kit (E)

E: **3842 998 742**

Please note:
The VarioFlow *plus* modules are not designed for reversible operation. Make the gear motor electrical connections **before** carrying out installation (see page 87), and check the rotational direction!

▶ Install the gear motor.

For adjusting the release torque of the safety coupling, see page 169.

[1]) Size shown

Curve wheel drive, gear motor installation

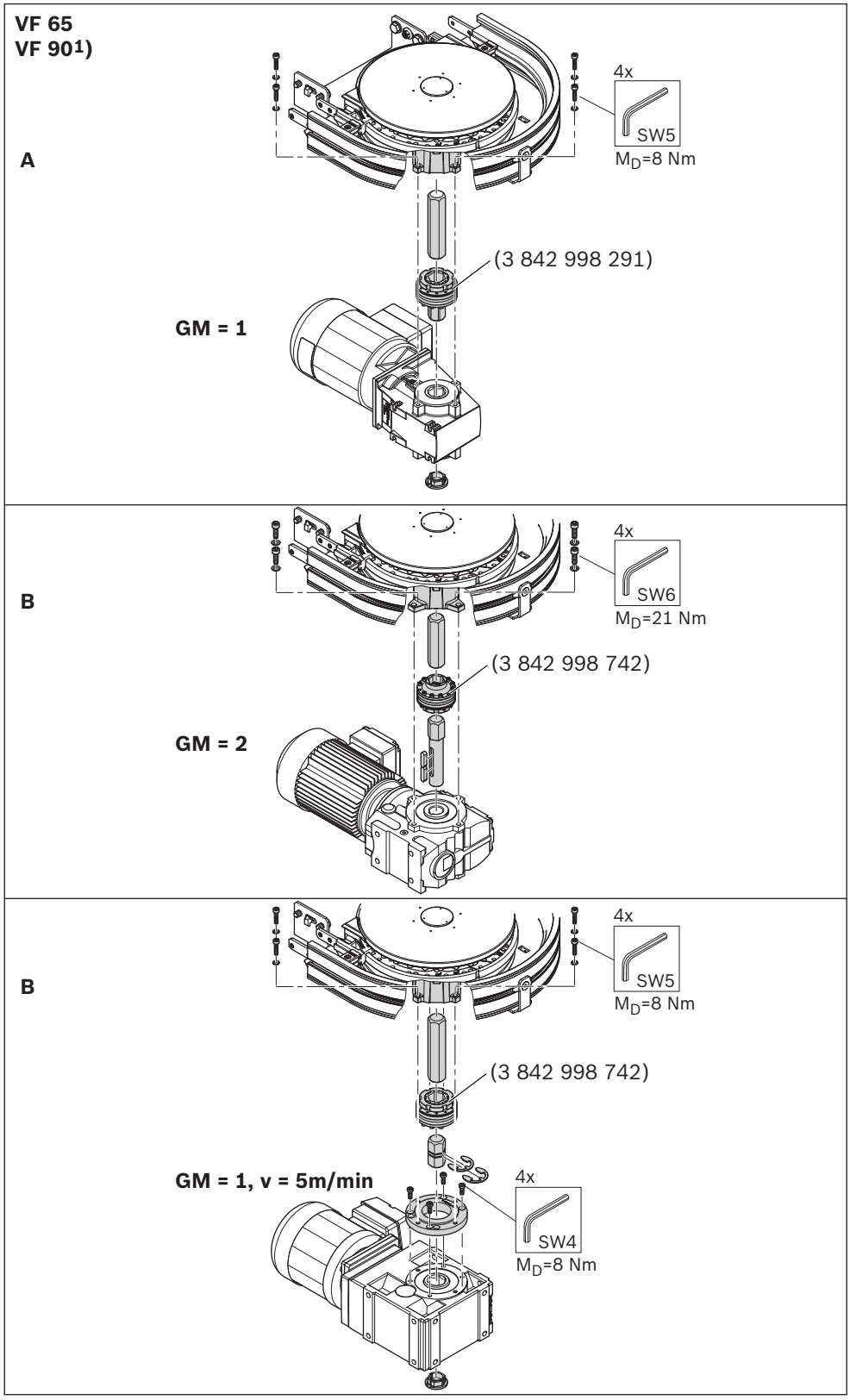

Fig. 157: Curve wheel drive, gear motor installation

Required accessories
- Tool VF*plus* Safety Clutch, consisting of:
  - hook spanner (X_1)
  - hexagonal shaft (X_2)
  - lock washer (X_3)

Please note:
Safety coupling factory setting:
- **3842 998 291** / **3842 547 549**: 120 Nm / 1250 N chain tensile force
- **3842 998 742** / **3842 547 659**: 90 Nm / 400 N chain tensile force

1. Remove the adapter (Y).
2. Remove the headless setscrew.
3. Adjust the release torque by turning the slotted nut.
   - Turn it in the direction marked "**+**" to increase the release torque.
   - Turn it in the direction marked "**–**" to reduce the release torque.

[1]) Factory setting marked with sealing wax.

[2]) Torque adjustment, factory setting (arrow/scale)

[3]) Scaling with 2 belleville spring washers (valid ex works).

[4]) Scaling with 1 belleville spring washer (valid after modification, see page 59).

Safety coupling adjustment

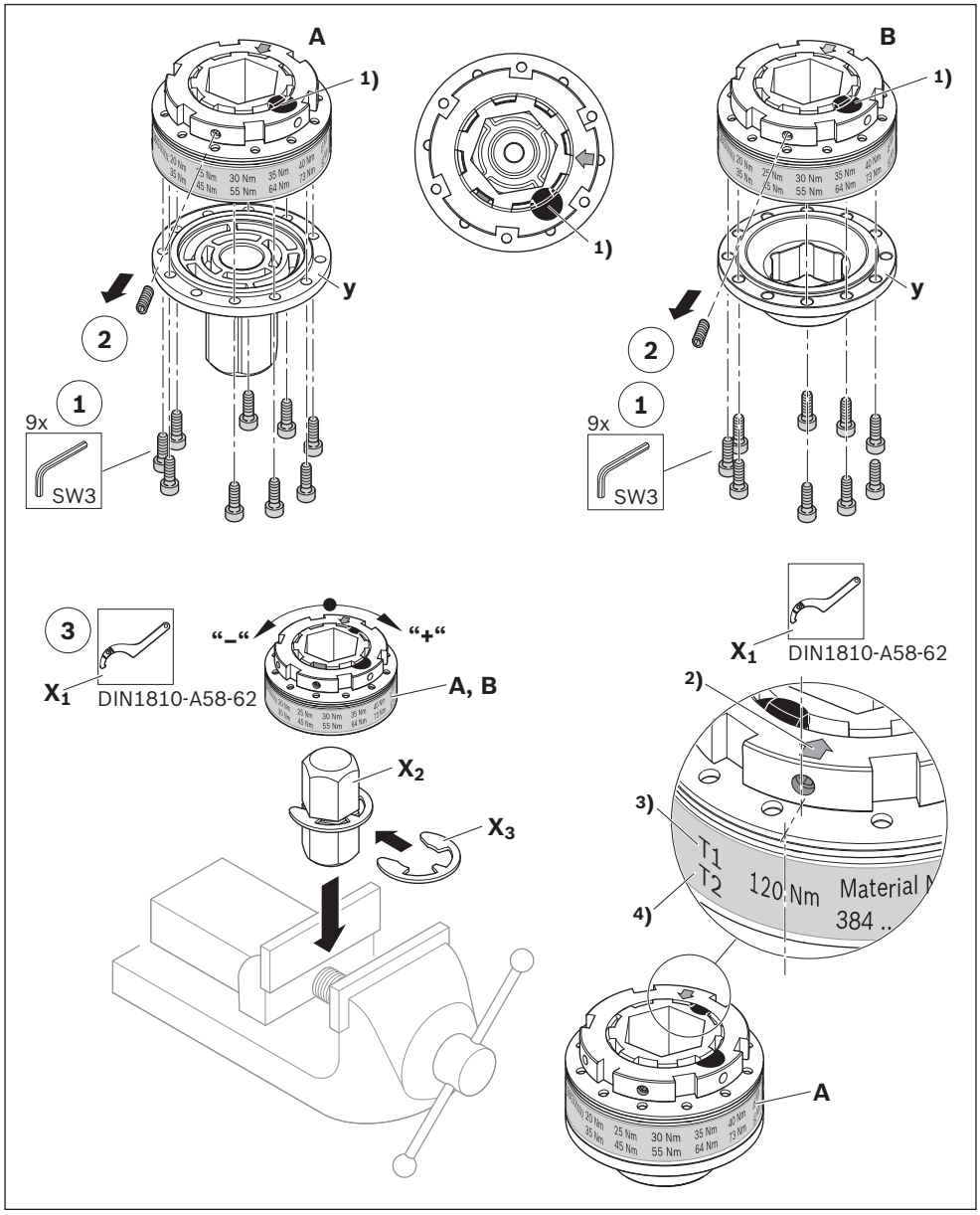

Fig. 158: Safety coupling adjustment (1/2)

A = connecting the basic unit / curve wheel drive with the Lenze gear motor (except v = 5 m/min)
B = connecting the curve wheel drive with the SEW gear motor

ENGLISH

4. Use the headless setscrew to apply the setting.
   To do this, select a threaded hole which matches a slot.
5. Install the adapter (Y).

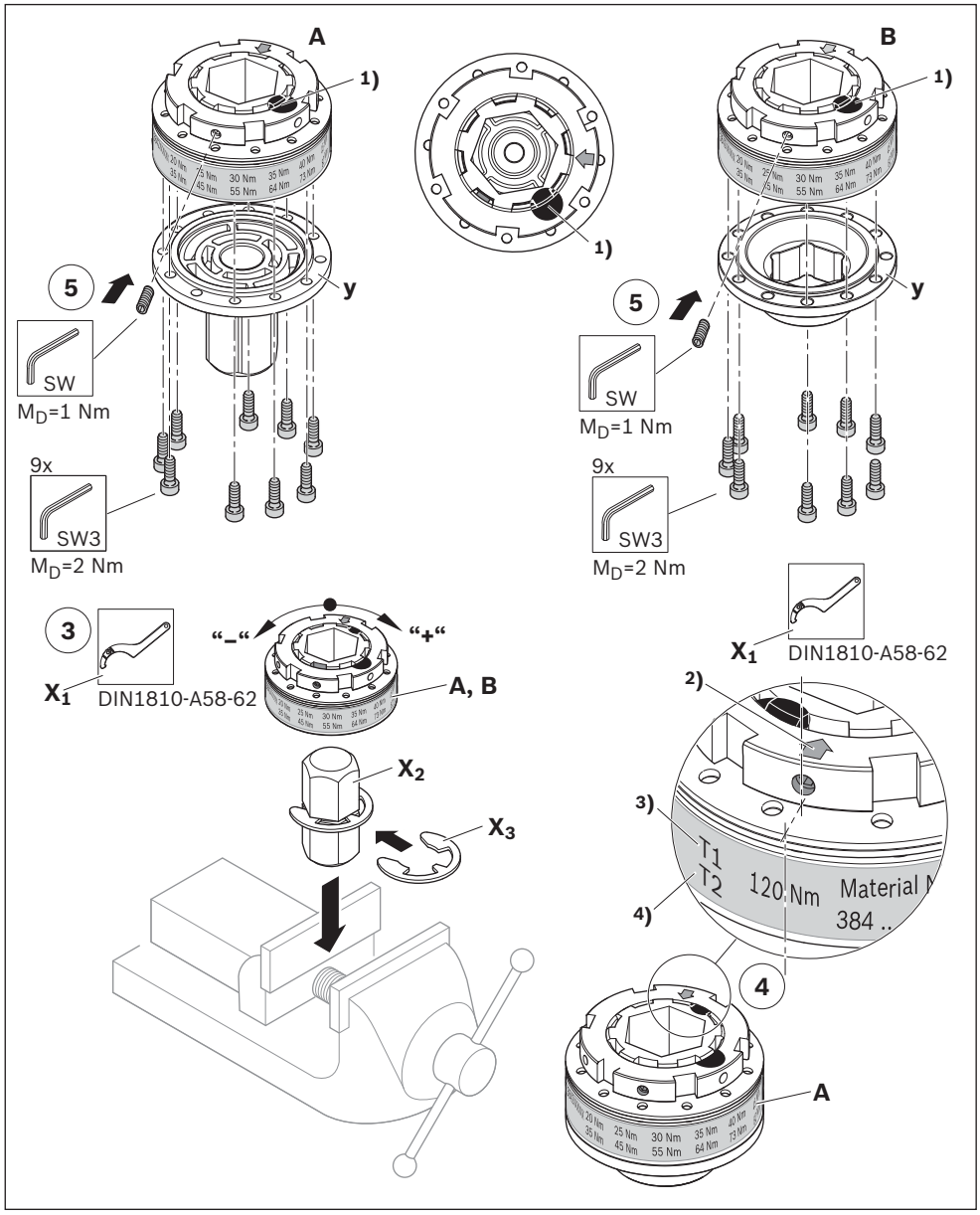

Fig. 159: Safety coupling adjustment (2/2)

A = connecting the basic unit / curve wheel drive with the Lenze gear motor (except v = 5 m/min)
B = connecting the curve wheel drive with the SEW gear motor

Required accessories
- Tool VF*plus* Safety Clutch, consisting of:
  - hook spanner (X_1)
  - hexagonal shaft (X_2)
  - lock washer (X_3)

Please note:
Safety coupling factory setting:
- **3842 998 291**, **3842 547 549**: 120 Nm / 1250 N chain tensile force
- **3842 998 742**, **3842 547 659**: 90 Nm / 400 N chain tensile force

1. Remove the headless setscrew.
2. Remove the slotted nut.
3. Remove a spring.
4. Install the slotted nut.
   ▶ Apply the slotted nut so that when it is applied (noticeable increase in force) the arrow coincides with the torque home position.
   Caution:
   The balls must engage in the holes of the belleville spring washers.
5. Adjust the release torque (see page 169).
6. ... (see page 169).
7. ... (see page 169).

Safety coupling modification

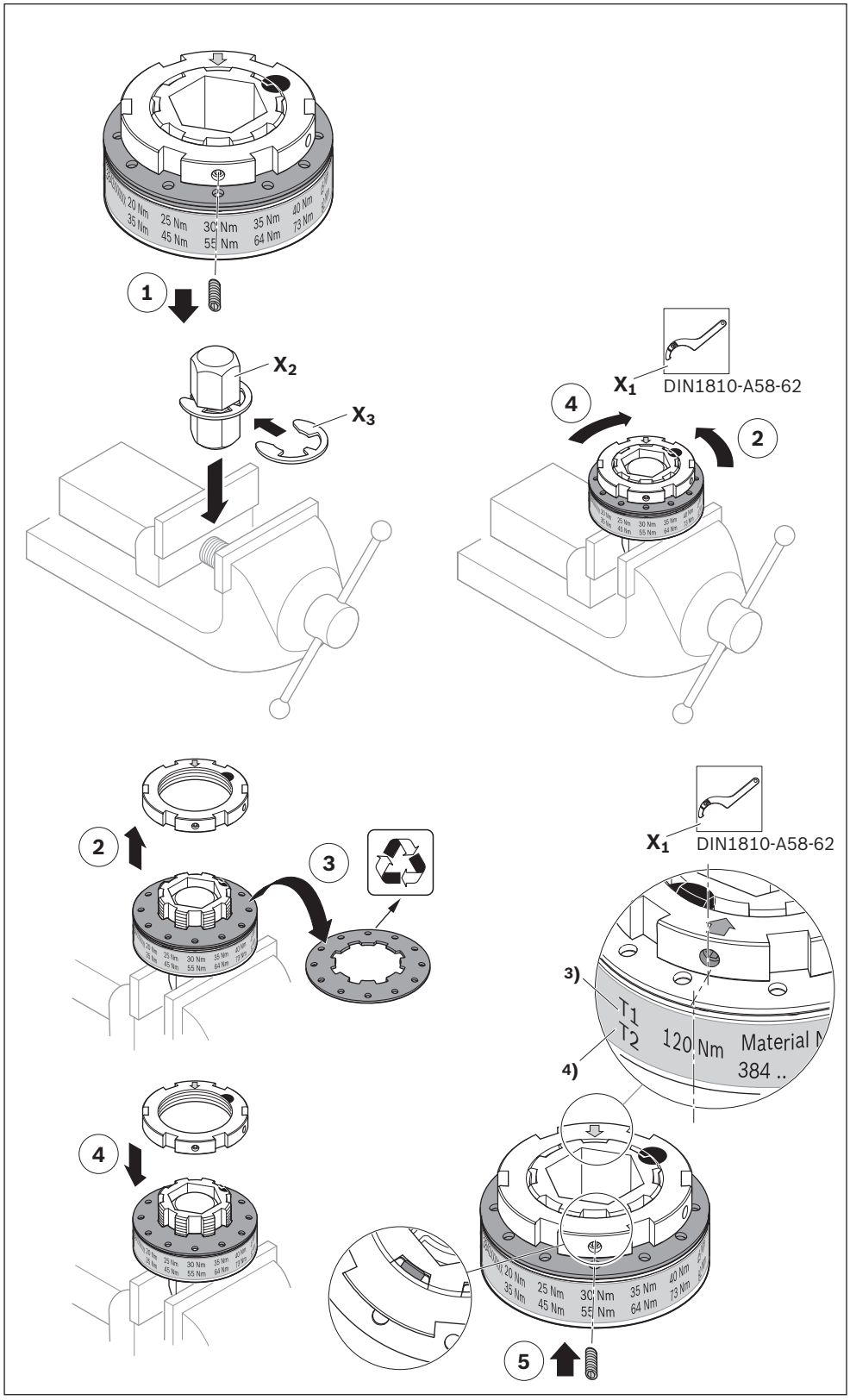

Fig. 160: Safety coupling modification

7.6 Making the electrical connection to the product

⚠ WARNING

High electrical voltage!
Risk of serious injury or death from electric shock.
- ▶ Disconnect the relevant system component before performing any maintenance or repair work.
- ▶ Secure the system against being unintentionally switched on again.

- Choose control and sensor elements in accordance with EN ISO 13849. When doing so, factor in the load that is to be transported and the transport speed.
- The motor may only be connected by qualified personnel!
- Comply with VDE regulation VDE 0100 for Germany, or corresponding regulations in the country of use.

Motor connection
- Observe the available supply voltage!
- Observe the electrical connection values shown on the motor nameplate, see Fig. 160 on page 171.
- Connect the motor in either a wye or a delta configuration in accordance with the wiring diagrams, see Fig. 161 on page 173, and the wiring diagram in the terminal box.
- The motor is fitted with a bimetal temperature monitoring switch (potential-free thermal contact, 230 V AC, 300 mA). Wire the motor so that it is de-energized when the switch is triggered.
- Insert the cable so that it cannot get damaged during operation.

Checking the rotational direction of the motor
- Let the system run for no more than 2 sec, then make sure the motor is rotating in the proper direction.
- Switch any two wires (U1, V1 or W1, see Fig. 161 on page 173) to change the motor's rotational direction.

Please note:
For motors that come with a fitted plug, correct the rotational direction in the control cabinet or at the socket contact (socket side). This makes replacement easier.

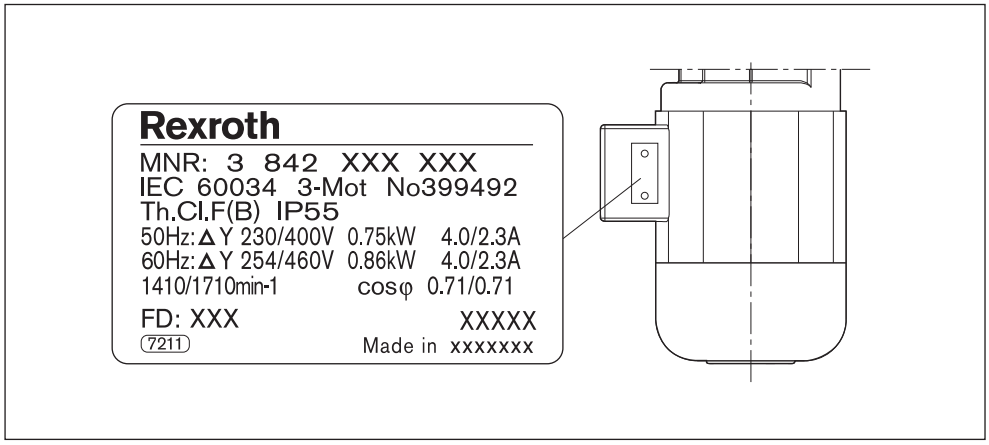

Fig. 161: Motor nameplate (example)

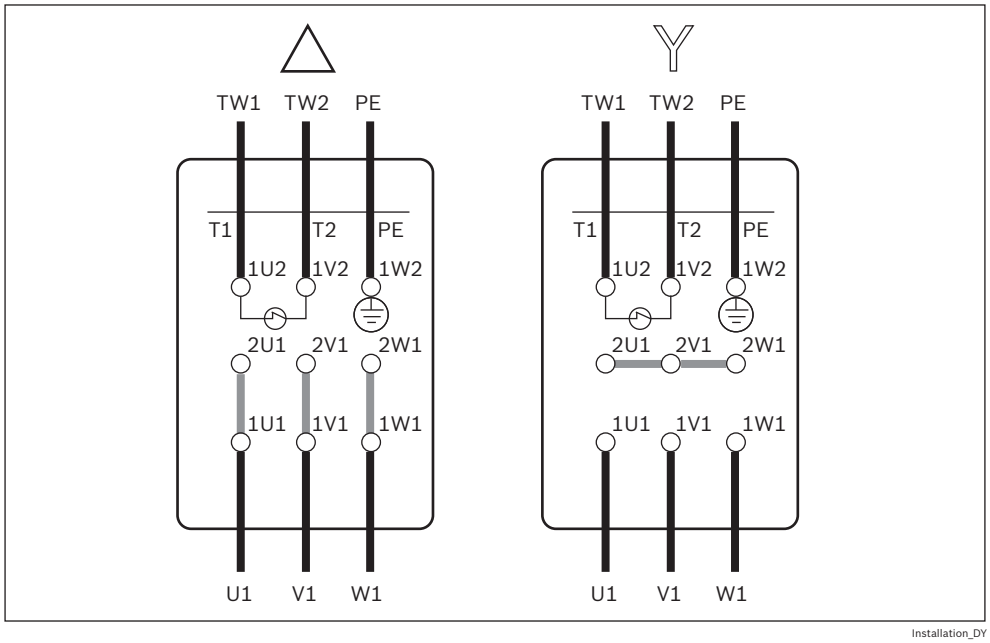

Fig. 162: Delta/wye connection diagrams

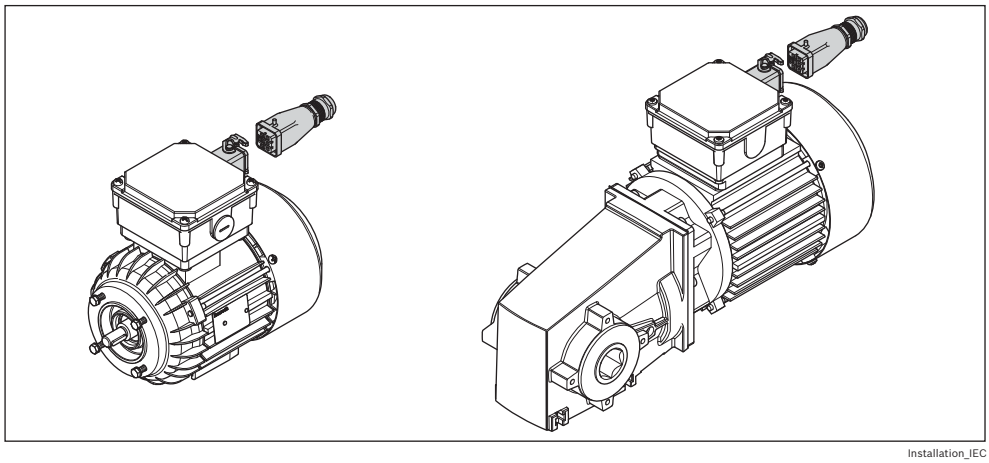

Fig. 163: Optional motor connection with plug (AT = S)

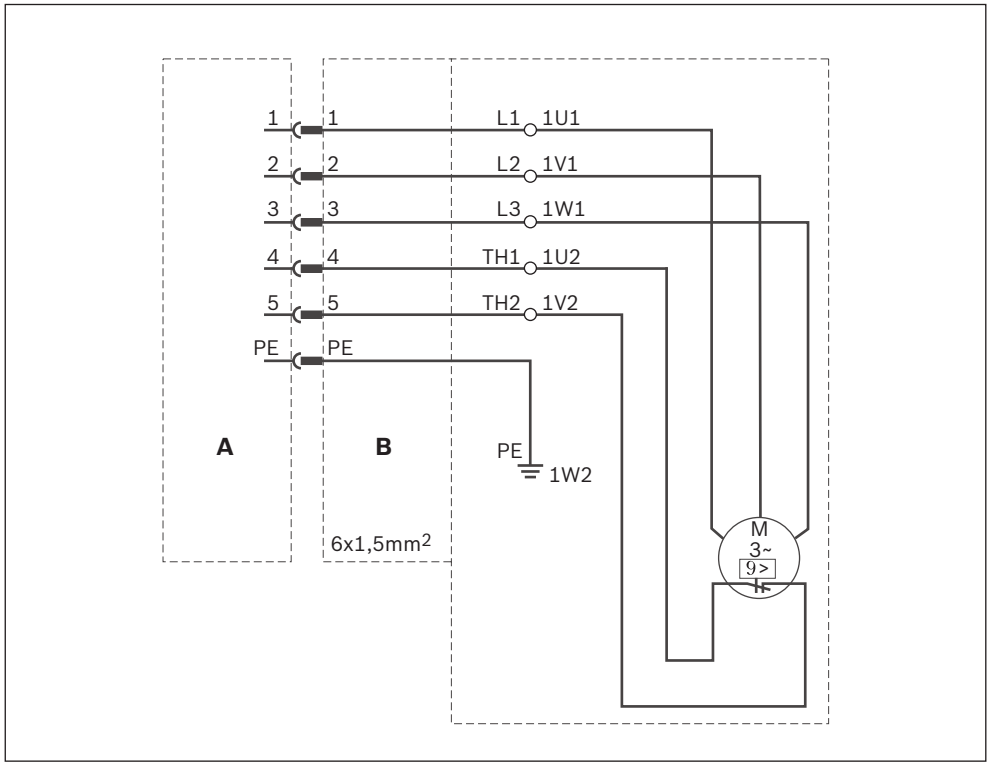

Fig. 164: Motor connection with plug (AT = 1), circuit diagram

A: Connection cable side

B: Motor side

The plug connection consists of UL components.

Connection list

Connection terminals, motor 3~	Pin no.	Code
U1	1	L1
V1	2	L2
W1	3	L3
TW1	4	Th1
TW2	5	Th2
	PE	PE

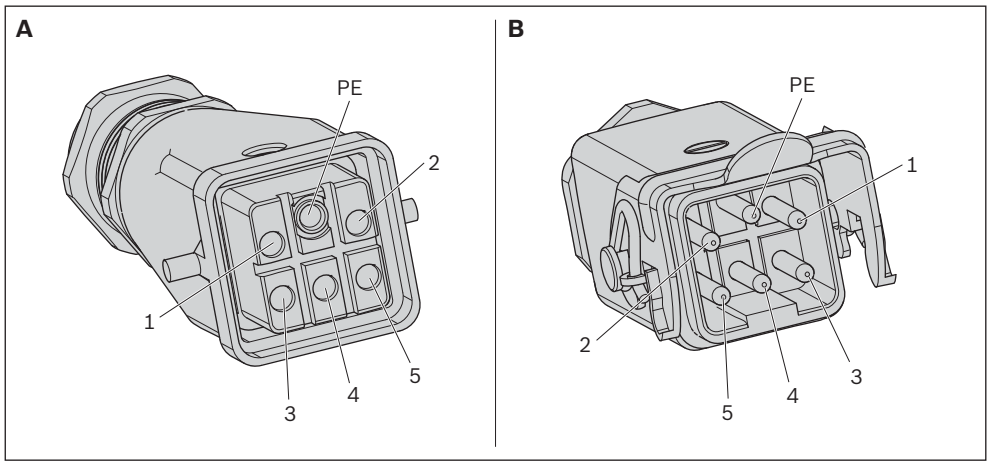

Fig. 165: Motor connection with plug (AT = 1), plug connection

A: Connection cable side

B: Motor side

8 Start-up

8.1 Initial start-up

⚠ CAUTION

Sudden movements, falling workpiece pallets
- ▶ Injuries caused by falling objects.
- ▶ Make sure that the product has been installed properly by qualified personnel (see page 10) before starting it up.

NOTICE

Malfunctions due to incorrect assembly and start-up
The product can get damaged, shortening its service life.
- ▶ Start-up requires basic mechanical, pneumatic and electrical knowledge.
- ▶ The product may only be started up by qualified personnel (see page 10)

ENGLISH

- Before the initial start-up or re-commissioning of a conveyor system, carry out a risk assessment in accordance with DIN EN ISO 12100.
- According to EU Machinery Directive 2006/42/EC, you must equip the transfer system with EMERGENCY STOP devices.
- The surfaces of motors and gears can reach temperatures of over 65°C under certain load and operating conditions. In these cases, you must comply with the respective applicable accident prevention regulations (UVV) by taking appropriate structural measures (guards) or by affixing/displaying appropriate warning signs!
- Make sure that all the electrical and pneumatic connections are either in use or covered. Make sure that all screw connections and plug-in connections are properly seated. All relevant protective covers must be fitted.
- Only inspect and adjust continuous conveyors that are in motion or operation when the safety guards are in place.
- Observe EN ISO 13857 when you remove or replace safety guards and/or bypass safety equipment.
- Test runs with open paneling should only be performed by a person with appropriate knowledge and experience using tip switches, and if there is no possibility of interference from other switching devices.
- Only start up the product if all safety equipment has been installed in the system and is functional.
- Only start up a product that has been completely installed.

8.2 Re-commissioning after a standstill

- Follow the steps outlined for the initial start-up.

9 Operation

⚠ CAUTION

Hot electric motor surfaces during operation!
Risk of burns from touching hot surfaces above 65 °C
- ▶ Install appropriate guards.
- ▶ Let the unit cool down for at least 30 minutes before performing maintenance and/or repair work.

9.1 Notes regarding operation

9.1.1 Wear

- Individual components are subject to unavoidable wear by their very nature. Constructive measures and the selection of materials help ensure functional reliability over the full service life. However, wear is also dependent on the operating, maintenance and ambient conditions at the place of use (resistance, contamination).
- Overloading the conveyor sections can cause the conveyor medium to malfunction and lead to the premature breakdown of motors and gears.
- If pneumatically activated components are overloaded, it is not possible to guarantee their function.

9.1.2 Measures to reduce wear

The following commonsense measures will reduce wear:
- Switch off the conveyor section when the system is not in use, e.g., during breaks, at night and on weekends.
- Do not select a higher speed for the conveyor section than that required for the corresponding function.
- It is especially important to avoid contamination caused by abrasive media (e.g. metal shavings or building dust, but also fine dust or sugar). Reduce the level of contamination through regular cleaning.

9.1.3 Environmental factors

- Our products are resistant to many media that are commonly found in manufacturing, such as water, mineral oil, grease and detergents. Contact your Rexroth representative if you have any doubts about resistance to specific chemicals, such as test oil, doped oils, aggressive cleaning agents, solvents or brake fluid.
- Avoid prolonged contact with highly reactive acidic or alkaline materials.
- Wear can increase significantly in the event of contamination – particularly with abrasive media in the environment, such as metal shavings or building dust, but also fine dust or sugar. Maintenance intervals should be significantly reduced under these circumstances.
- Resistance to media and contamination does not mean that functional safety is guaranteed in every case.
  - Liquids that thicken as they evaporate and become highly viscous or adhesive (sticky) can lead to malfunctions.
  - If they get carried onto systems with rollers, media which have a lubricating effect can lead to a reduction in the drive power that is transmitted via friction.

  In such instances, special care must be taken when planning the system, and the maintenance intervals must be correspondingly shortened.

10 Maintenance and repair

⚠ WARNING

High electrical voltage!
Risk of serious injury or death from electric shock.
- ▶ Disconnect the relevant system component before performing any maintenance or repair work.
- ▶ Secure the system against being unintentionally switched on again.

High pneumatic pressure!
Risk of serious injury or death.
- ▶ Switch off the compressed air supply to the relevant system component before performing any maintenance or repair work.
- ▶ Secure the system against being unintentionally switched on again.

⚠ CAUTION

Hot electric motor surfaces during operation!
Risk of burns from touching hot surfaces above 65 °C
- ▶ Install appropriate guards.
- ▶ Let the unit cool down for at least 30 minutes before performing maintenance and/or repair work.

ENGLISH

- Only inspect and adjust continuous conveyors that are in motion or operation when the safety guards are in place.
- Observe DIN EN ISO 13857 when you remove or replace safety guards and/or bypass safety equipment.
- Test runs with open paneling should only be performed by a person with appropriate knowledge and experience using tip switches, and if there is no possibility of interference from other switching devices.

10.1 Cleaning and care

NOTICE

Bearing failure
Applying grease-dissolving substances to the bearing points, e.g. when cleaning, leads to bearing failure. There is a risk of damage to property, and service life may be reduced.
- ▶ Keep degreasers or aggressive cleaning agents away from the bearings!
- ▶ Only clean the product with a damp cloth.

Conveyor chain failure
Applying grease-dissolving substances to the conveyor chain, e.g. during cleaning, leads to the failure of the conveyor chain. There is a risk of damage to property.
- ▶ Keep degreasers or aggressive cleaning agents away from the conveyor chain!
- ▶ Only clean the product with a damp cloth.

10.2 Inspection

Conveyor chain
- During the break-in phase, but afterwards too, the conveyor chain lengthens as its overall period of operation increases (the chain bag enlarges and projects beyond

the guard plates, see Fig. 12). A chain bag that is too large leads to increased noise emissions and wear at the point where the conveyor chain enters the drive unit.

▶ Remove a few chain links from the conveyor chain after a break-in period of approx. 40 hours.

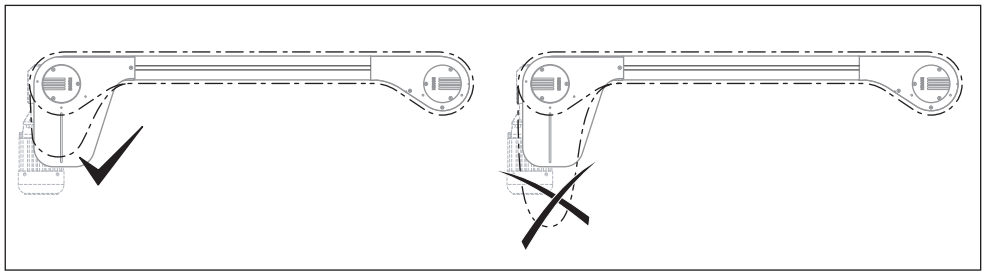

562 411-166

Fig. 166: Elongation of the conveyor chain

- Further inspections of the chain bag are necessary after 200 hrs, 400 hrs, 600 hrs, and then every 1000 hours.
- The maximum permissible elongation of the conveyor chain is 5%.

▶ Replace the conveyor chain when this limit is reached.

Conveyor chains are wear parts.

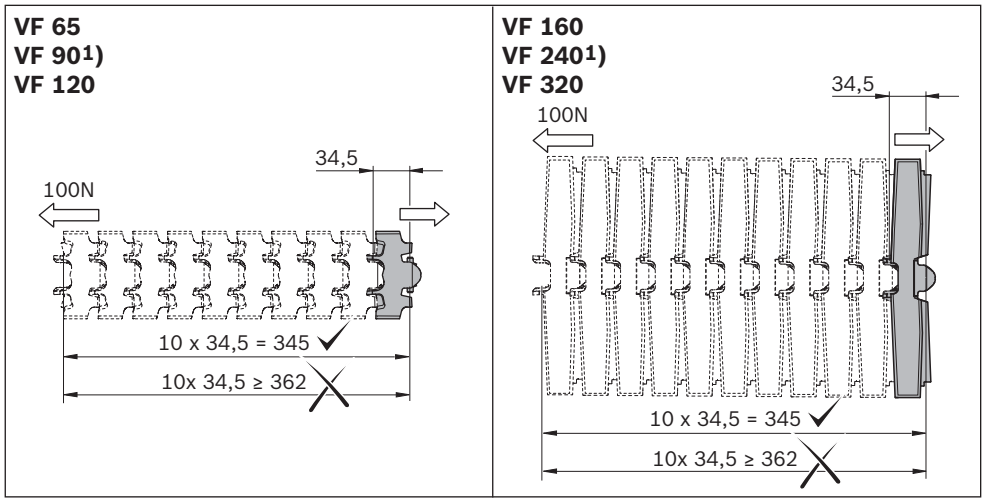

562 411-167

Fig. 167: Max. permissible elongation (5%) of the conveyor chain

Slide rails

- Visually check for break-in scoring of the slide rails and the underside of the chain plates (in the head drive chain bag) every 2000 hrs (approx. 83 days of 3-shift operation), and clean any abrasion dust from the system. There is increased wear of the chain conveyor during the break-in phase which lasts for approx. 3 weeks. Please increase the frequency of cleaning to take account of this.
  Total max. permissible wear of the slide rail and chain plate 0.7 mm.

  Slide rails are wear parts.

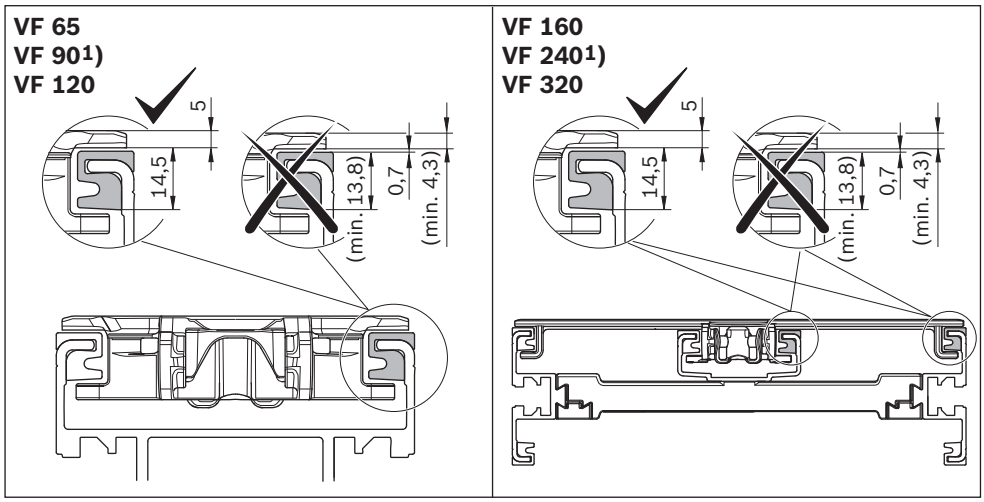

Fig. 168: Max. permissible wear (0.7 mm in total) of the slide rail and chain plate

[1]) Size shown

Sliding curves

- Visually check for break-in scoring of the slide rails in horizontal or vertical sliding curves every 250 operating hours.
  Total max. permissible wear of the slide rail and chain plate 0.7 mm.
  Slide rails are wear parts.

Roller curves

- In horizontal curves check that the roller bearings run smoothly. Replace worn slide rails.
  Total max. permissible wear of the slide rail and chain plate 0.7 mm.
  Slide rails are wear parts.

System as a whole

- Every 2000 operating hours (or every 500 hrs if horizontal or vertical sliding curves are used) remove the conveyor chain from the chain conveyor and check for any break-in scoring of the slide rails and the underside of the chain plates. Also check for correct attachment and level of wear.

Wear of conveyor chains

At the prescribed maintenance intervals (at the latest every 2000 hrs, or more frequently in the case of abrasive environments), open the conveyor chain and use a measuring device to measure the wear.

- Thickness of the slide rail (for permissible wear, see page 26)
- Break-in scoring of the underside of the chain (for permissible wear, see page 26)
- Chain elongation (permissible elongation < 5%, see page 26)
- Drive gear: visually check and feel the teeth of opened chain.
  - tooth height must be maintained.
  - teeth must not be pointed.

  Drive gears are wear parts.

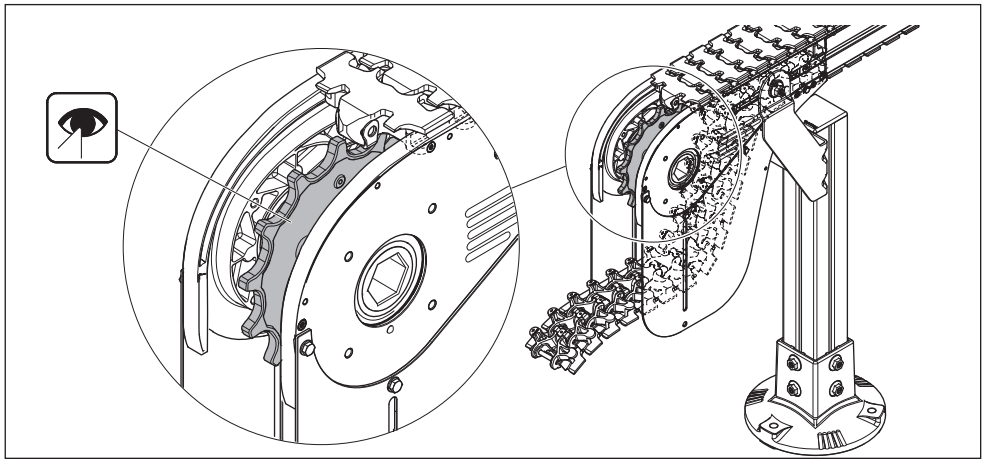

Fig. 169: Drive gear: visually check and feel the teeth of opened chain

Accumulation operation

Please note:

Sliding friction causes increased temperatures and increased wear. Maintenance intervals are therefore reduced.

- In the accumulation area visually check for break-in scoring of slide rails and the underside of chain plates every 500 hours.
  Total max. permissible wear of the slide rail and chain plate 0.7 mm.
  Continual system checks are recommended in accumulation operation.

10.3 Maintenance

Bearings
The bearings have lifelong lubrication and are maintenance-free under normal conditions of use.

Gear
The gear is maintenance-free.

Motor
To ensure adequate cooling of the motors, regularly remove dirt and dust deposits:
• from the surface of the motor,
• from the intake openings on the fan hood,
• from between the cooling ribs.
The cleaning intervals depend on the ambient and operating conditions.

10.4 Replacement of wear parts

Required tools
• Hex wrench SW13
• Hex socket wrenches SW3, SW4, SW5
• Pozidriv screwdriver, PZ2
• Caliper, 500 mm
• Rubber mallet
• Drift punch

Conveyor chain
Conveyor chain replacement, see conveyor chain installation, page 85 and following.

Slide rails
Slide rail replacement, see slide rail installation, page 76 and following.

Remove basic unit, see basic unit installation, page 36 (AL) / page 57 (STS).

[1]) Size shown

Drive gears

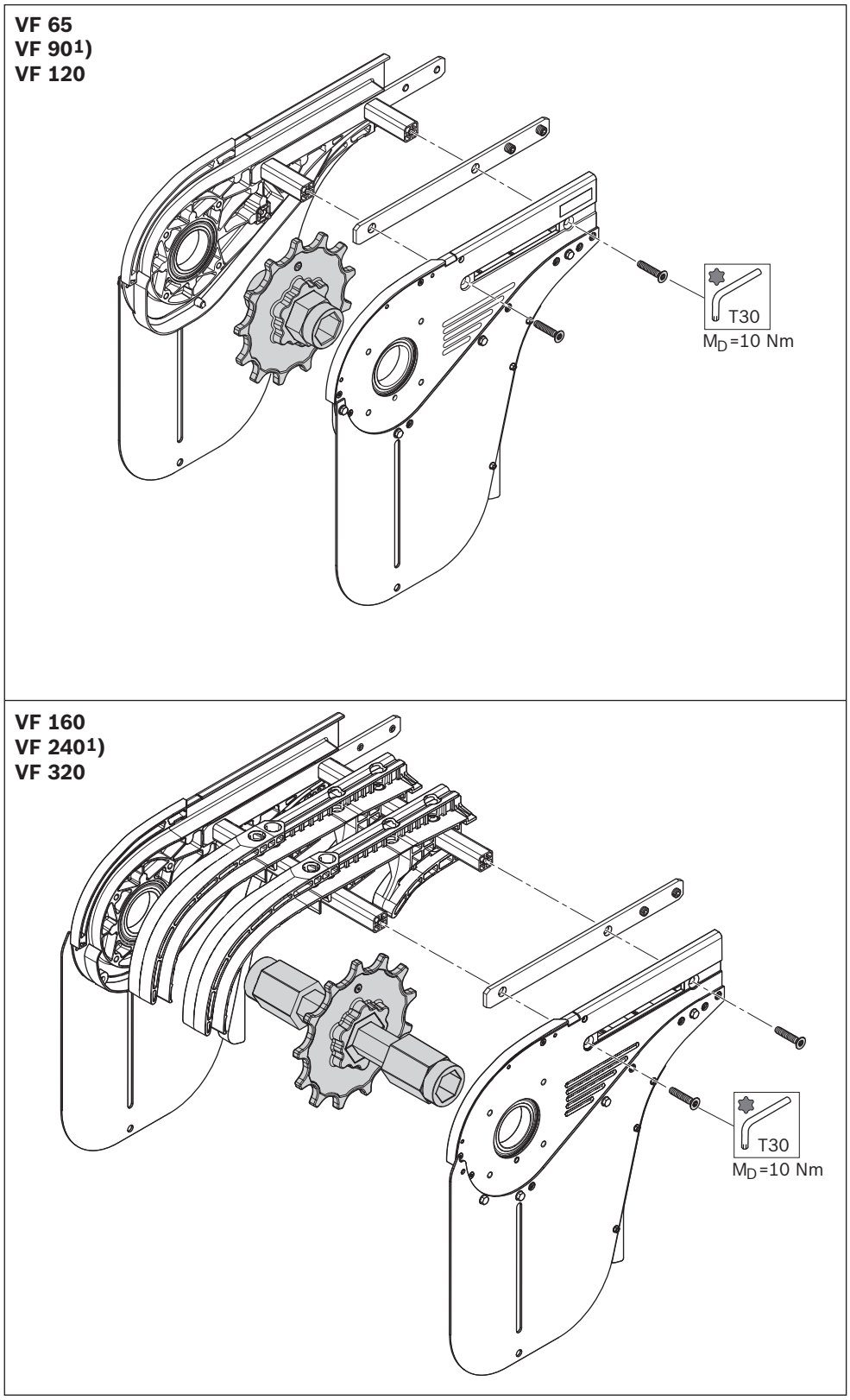

Fig. 170: Replacing drive gears

10.5 Spare parts

For a list of spare parts, see MT*parts*, **3842 539 057** (www.boschrexroth.com/mtpro).

11 Decommissioning

This product does not need to be decommissioned. Accordingly, this section has been left blank.

12 Disassembly and replacement

⚠ WARNING

High electrical voltage!
Risk of serious injury or death from electric shock.
- ▶ Disconnect the relevant system component before performing any maintenance or repair work.
- ▶ Secure the system against being unintentionally switched on again.

High pneumatic pressure!
Risk of serious injury or death.
- ▶ Switch off the compressed air supply to the relevant system component before performing any maintenance or repair work.
- ▶ Secure the system against being unintentionally switched on again.

Suspended loads can fall!
Falling objects can result in serious injury (or even death).
- ▶ Use only slings with sufficiently high bearing load capacity (for product weight see delivery documents)
- ▶ Make sure the lifting straps are correctly fastened before lifting the product!
- ▶ Secure the product against tipping over when lifting!
- ▶ Make sure that no one but the operator is in the danger zone during lifting and lowering!

12.1 Preparing the product for storage/later use

- Only set the product down on a flat surface.
- Protect the product from mechanical stress.
- Protect the product from environmental influences such as dirt and humidity.
- Observe the ambient conditions, see page 185.
- For products with a mounted motor: support the product so that the motor is not placed under mechanical load.

ENGLISH

13 Disposal

- The materials used are environmentally friendly.
- They can be recycled or reused (components may have to be processed and replaced). Recyclability is ensured by the selection of materials and the ability to take the components apart.
- Careless disposal may lead to environmental contamination.
- Dispose of the product in accordance with the regulations in your country.

14 Upgrading and modification

- Do not modify the product.
- The Bosch Rexroth warranty only applies to the configuration as delivered, and to approved upgrades. The manufacturer will not accept any warranty claims for systems with unapproved modifications or upgrades.

15 Troubleshooting and repair

- If you cannot correct a fault, please contact one of the addresses you can find at www.boschrexroth.com.

16 Technical data

- For dimensions, see sales catalog VarioFlow *plus*, 3 842 562 411.
- Maximum load: kg
- Maximum section load: 1.0 kg/cm support surface length
- Noise emission: < 70 dB (A)

16.1 Ambient conditions

- The transfer systems have been designed for stationary use in a location that is protected from the elements.
- Operating temperature: +0 °C to +60 °C (effect of temperature on the load limit of the conveyor chain, see BKBsoft.)
- Storage temperature: -25 °C to +70 °C
- Relative humidity: 5 % to 85 %, non-condensing
- Air pressure: > 84 kPa, corresponds to an altitude < 1400 m above sea level
- Permissible load capacity of floor: 1000 kg/m^2
- At altitudes > 1400 m, the load values of the electric drives are reduced by 15 %.
- The area should be kept free of mold, fungus, rodents and other vermin.
- Do not install or operate in the immediate vicinity of industrial equipment producing chemical emissions.
- Do not install or operate near sources of sand or dust.
- Do not install or operate in areas that are regularly subjected to high-energy forces caused, for example, by presses or heavy machinery.
- Resistant to many media that are commonly found in manufacturing, such as water, mineral oil, grease, and detergents. If you are unsure about resistance against certain chemicals such as test oil, doped oils, aggressive cleaning agents, solvents, or brake fluid, we recommend that you consult your specialist Rexroth representative.
- Avoid prolonged contact with highly reactive acidic or alkaline materials.

ENGLISH

Bosch Rexroth AG
Postfach 30 02 07
70442 Stuttgart
Germany
Fax +49 711 811–7777
info@boschrexroth.de
www.boschrexroth.com

Subject to change
3 842 562 412/2019-06